NOTES

THE LATERAL GUIDE AT EACH END OF THE CAP IS NOT TO BE POURED UNTIL AFTER THE CORED SLAB UNITS ARE IN PLACE.

STIRRUPS IN CAP MAY BE SHIFTED AS NECESSARY TO CLEAR DOWELS.

THE CONTRACTOR SHALL PROVIDE FOR INSTALLATION OF THE 4"DIAMETER DRAIN PIPE THROUGH THE WING WALL AS REQUIRED FOR REINFORCED BRIDGE APPROACH FILLS, SEE THE ROADWAY PLANS. REINFORCING STEEL IN THE WING WALL MAY BE SHIFTED AS NECESSARY TO CLEAR THE DRAIN PIPE.

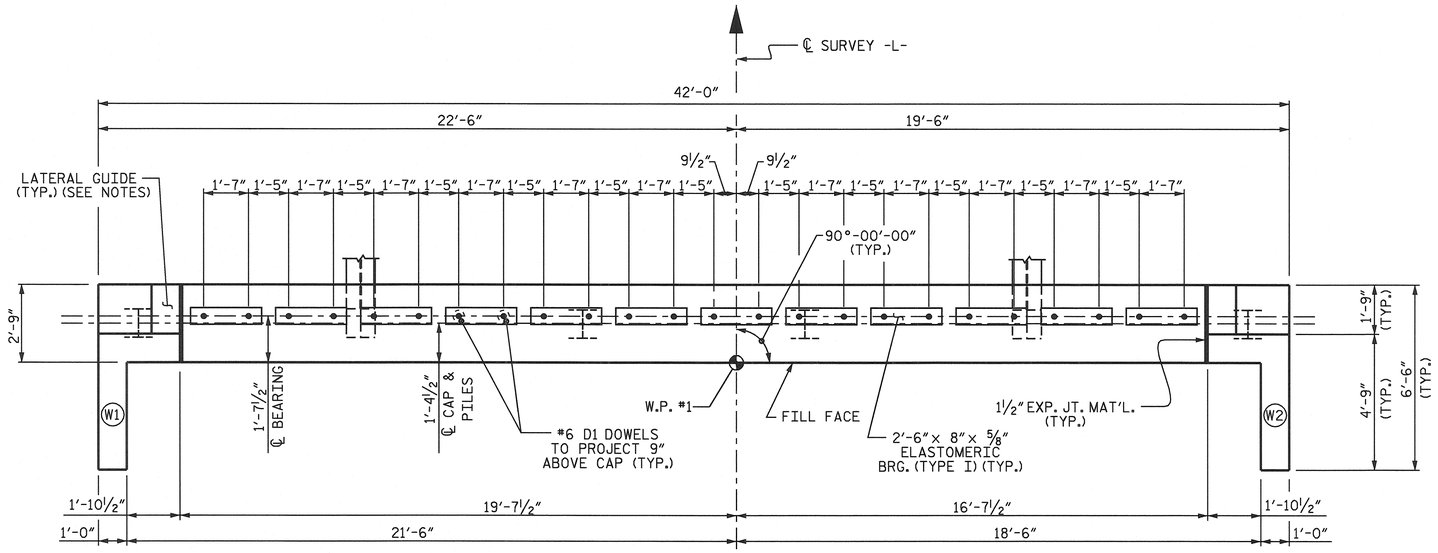

PLAN

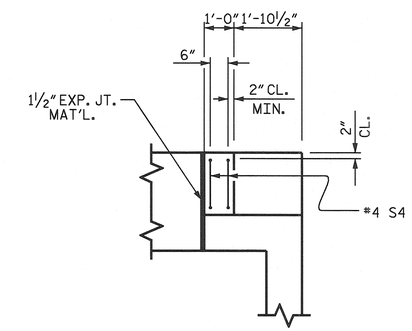

PLAN

SPLICE CHART	
#4 B3	2'-5"

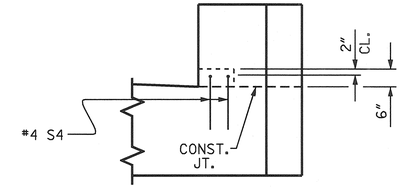

ELEVATION

LATERAL GUIDE DETAILS

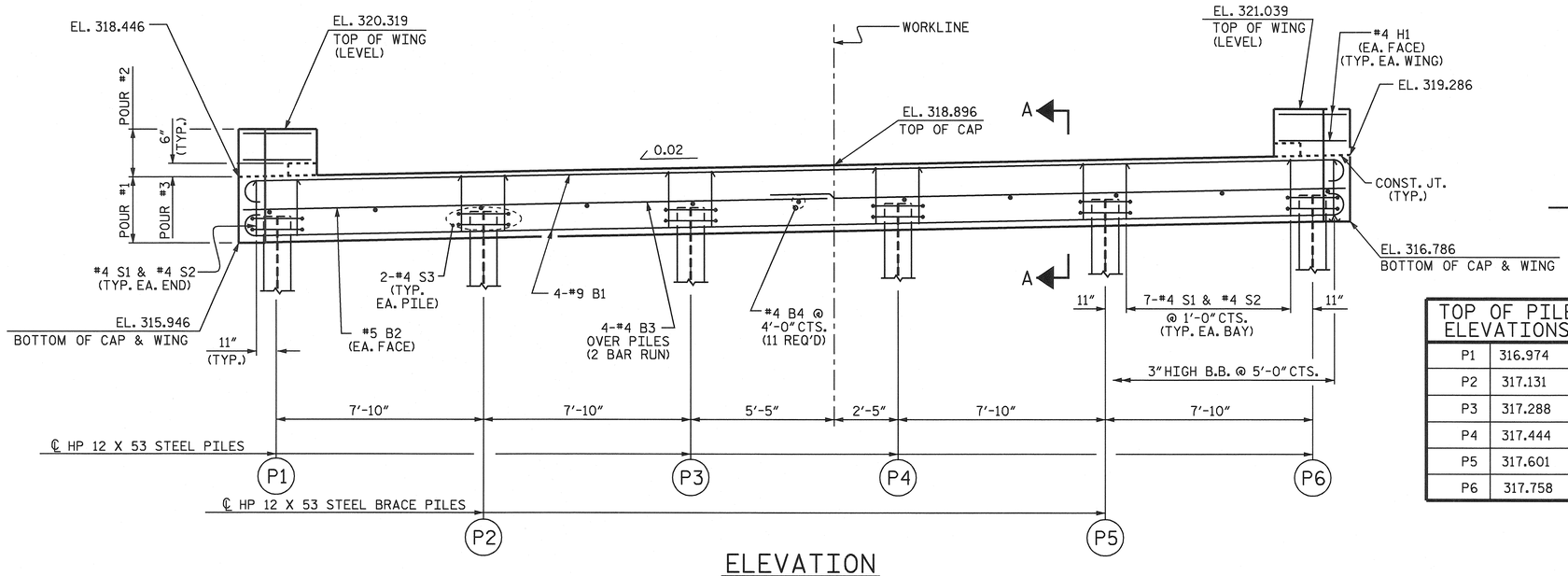

ELEVATION

TOP OF PILE ELEVATIONS	
P1	316.974
P2	317.131
P3	317.288
P4	317.444
P5	317.601
P6	317.758

PROJECT NO. B-3530

WAKE COUNTY

STATION: 15+83.00 -L-

SHEET 1 OF 2

STATE OF NORTH CAROLINA
DEPARTMENT OF TRANSPORTATION
RALEIGH

SUBSTRUCTURE
END BENT 1

NORTH CAROLINA PROFESSIONAL SEAL 21638 ENGINEER LAURA E. SUTTON
10/12/04

REVISIONS						SHEET NO.
NO.	BY:	DATE:	NO.	BY:	DATE:	S-10
1			3			TOTAL SHEETS
2			4			21

DRAWN BY : JLW/A.S. CALLAWAY DATE : 2-3-04
CHECKED BY : B.N. BARODAWALA DATE : 3-19-04

20-SEP-2004 11:49
W:\Squad1\b3530\jwalton\B3530_sd_E#_01.dgn
lsutton