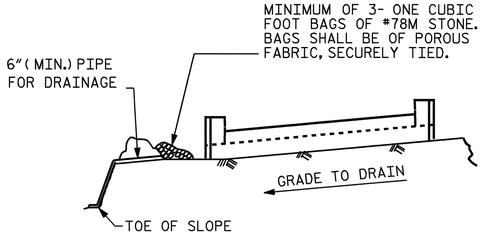

BAGGED STONE AND PIPE SHALL BE PLACED IMMEDIATELY AFTER COMPLETION OF END BENT EXCAVATION. PIPE MAY BE EITHER CONCRETE, CORRUGATED STEEL, CORRUGATED ALUMINUM ALLOY, OR CORRUGATED PLASTIC. PERFORATED PIPE WILL NOT BE ALLOWED.

BAGGED STONE SHALL REMAIN IN PLACE UNTIL THE ENGINEER DIRECTS THAT IT BE REMOVED. THE CONTRACTOR SHALL REMOVE AND DISPOSE OF SILT ACCUMULATIONS AT BAGGED STONE WHEN SO DIRECTED BY THE ENGINEER. BAGS SHALL BE REMOVED AND REPLACED WHENEVER THE ENGINEER DETERMINES THAT THEY HAVE DETERIORATED AND LOST THEIR EFFECTIVENESS.

NO SEPARATE PAYMENT WILL BE MADE FOR THIS WORK AND THE ENTIRE COST OF THIS WORK SHALL BE INCLUDED IN THE UNIT CONTRACT PRICE BID FOR THE SEVERAL PAY ITEMS.

TEMPORARY DRAINAGE AT END BENT

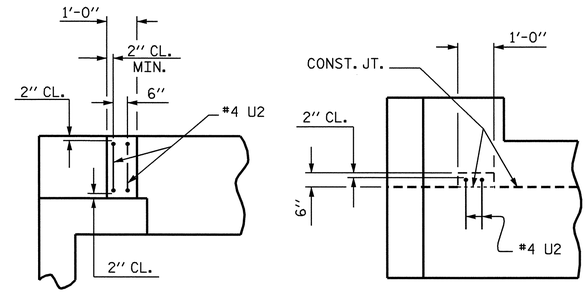

PLAN ELEVATION

LATERAL GUIDE DETAILS

(EACH END SIMILAR)

BAR TYPES

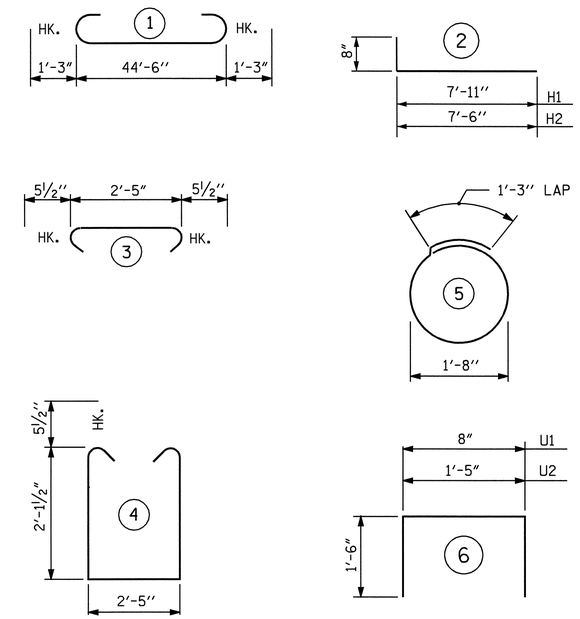

ALL BAR DIMENSIONS ARE OUT TO OUT.

BILL OF MATERIAL
END BENT NO. 2

BAR	NO.	SIZE	TYPE	LENGTH	WEIGHT
B1	8	9	1	47'-0"	1278
B2	2	5	STR	44'-6"	93
B3	8	4	STR	23'-7"	126
B4	11	4	STR	2'-5"	18
D1	26	8	STR	2'-3"	156
H1	16	4	2	8'-7"	92
H2	14	4	2	8'-4"	78
H3	10	4	STR	3'-1"	21
H4	8	4	STR	3'-9"	20
K1	12	4	STR	23'-7"	189
S1	54	4	4	7'-7"	274
S2	54	4	3	3'-4"	120
S3	22	4	5	6'-6"	96
U1	38	4	6	3'-8"	93
U2	4	4	6	4'-5"	12
V1	76	5	STR	4'-6"	356
V2	28	4	STR	6'-4"	118
V3	28	4	STR	6'-1"	114
REINFORCING STEEL					3255 LBS

CLASS A CONCRETE BREAKDOWN :

POUR #1 (CAP & LOWER WINGS)	12.8 C.Y.
POUR #2 (UPPER PORTION OF WINGS & BACKWALL	6.6 C.Y.
POUR #3 (LATERAL GUIDES)	0.1 C.Y.
TOTAL	19.5 C.Y.

HP 12 X 53 STEEL PILES
NO. 11 90 LIN FT.

STEEL PILE POINTS
NO. 11 EACH

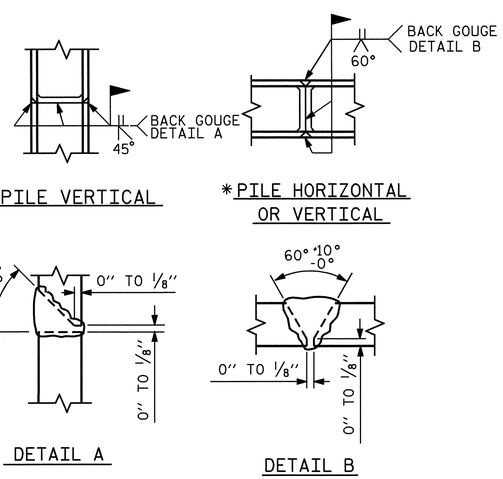

*POSITION OF PILE DURING WELDING.

PILE SPLICE DETAILS

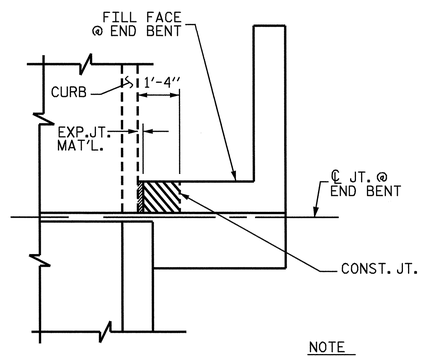

PLAN

NOTE

THE CONCRETE IN THE SHADED AREA OF THE WING SHALL BE POURED AFTER THE BARRIER RAIL IS CAST IF SLIP FORMING IS USED.

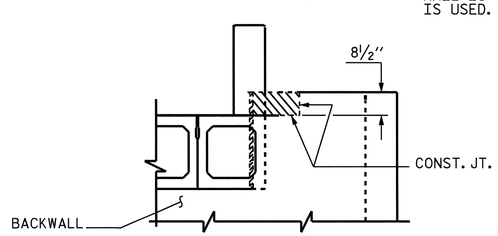

ELEVATION

BLOCKOUT IN WING WALL

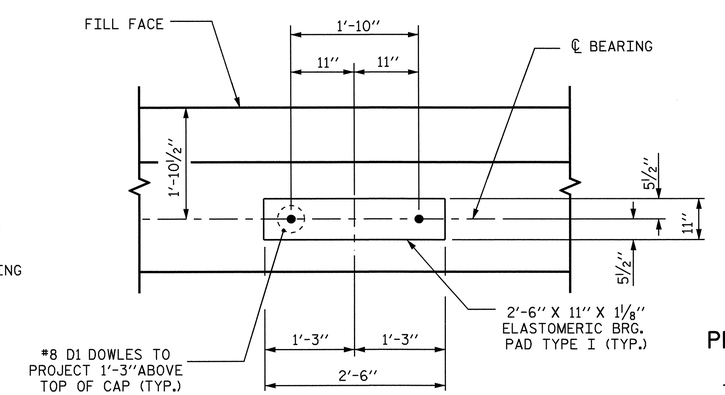

BEARING DETAIL

PROJECT NO. B-3522
WAKE COUNTY
STATION: 26+10.50 -L-

SHEET 3 OF 3

STATE OF NORTH CAROLINA
DEPARTMENT OF TRANSPORTATION
RALEIGH

SUBSTRUCTURE
END BENT 2

NORTH CAROLINA PROFESSIONAL SEAL 15779 ENGINEER JOHN R. DUGGINS, JR.
11/24/09

REVISIONS						SHEET NO.
NO.	BY:	DATE:	NO.	BY:	DATE:	S-18
1			3			TOTAL SHEETS
2			4			21

DRAWN BY : M. POOLE DATE : 9/2004
CHECKED BY : S. W. PEARCE DATE : 10/2004