PROJECT REFERENCE NO.	SHEET NO.
B-3670	2-C

STATE OF NORTH CAROLINA DEPT. OF TRANSPORTATION DIVISION OF HIGHWAYS RALEIGH, N.C.

ENGLISH DETAIL DRAWING FOR **GUARDRAIL INSTALLATION**

SHEET 1 OF 7 **862D02**

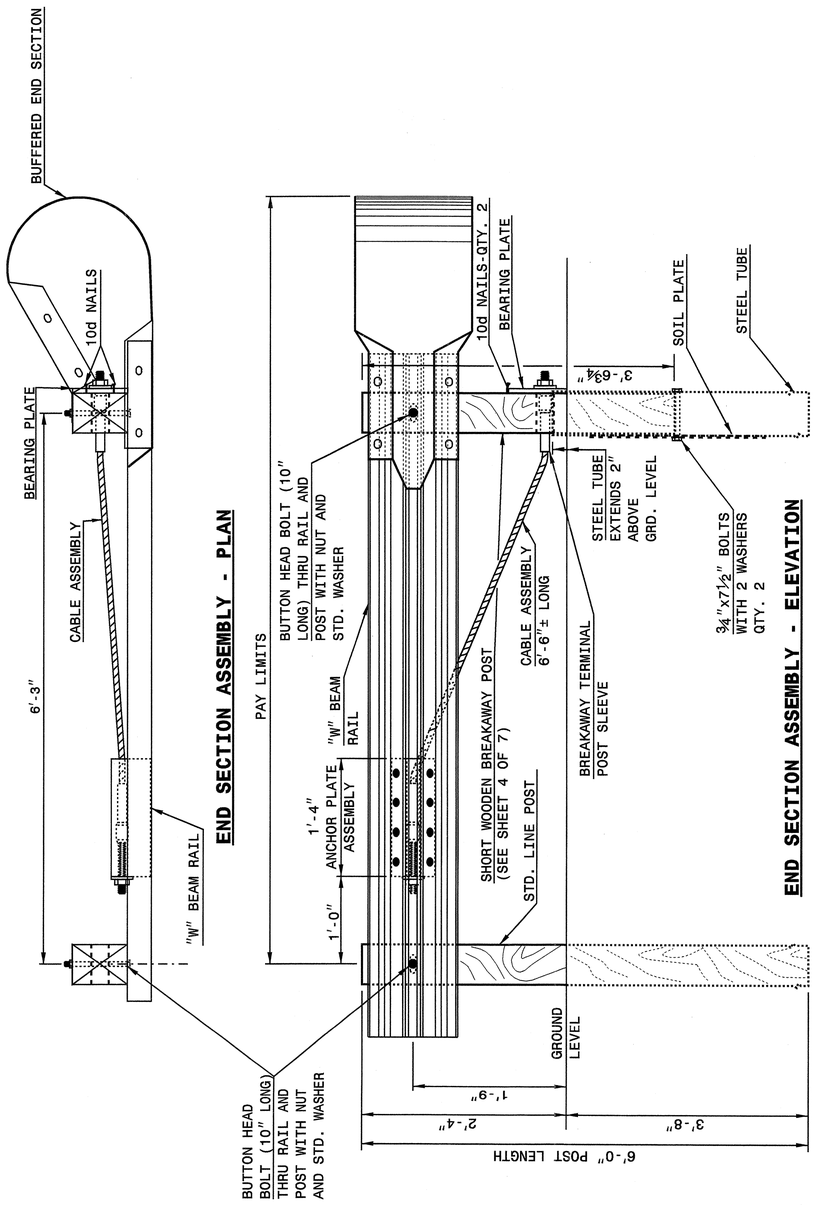

STATE OF NORTH CAROLINA DEPT. OF TRANSPORTATION DIVISION OF HIGHWAYS RALEIGH, N.C.

ENGLISH DETAIL DRAWING FOR **GUARDRAIL INSTALLATION**

SHEET 1 OF 7 **862D02**

STATE OF NORTH CAROLINA DEPT. OF TRANSPORTATION DIVISION OF HIGHWAYS RALEIGH, N.C.

ENGLISH DETAIL DRAWING FOR **GUARDRAIL INSTALLATION**

SHEET 2 OF 7 **862D02**

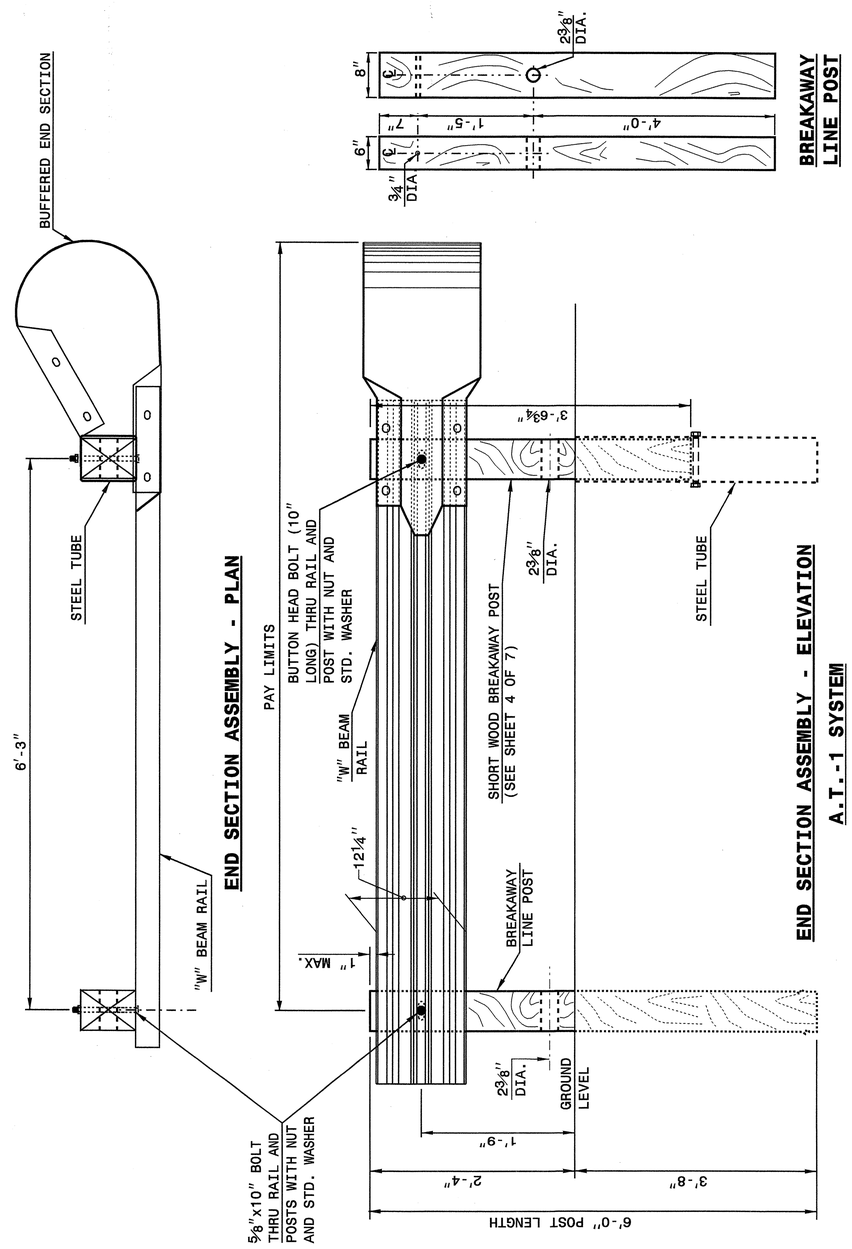

STATE OF NORTH CAROLINA DEPARTMENT OF TRANSPORTATION DIVISION OF HIGHWAYS RALEIGH, N.C.

ENGLISH DETAIL DRAWING FOR **GUARDRAIL INSTALLATION**

SHEET 1 OF 7 **862D02**

STATE OF NORTH CAROLINA DEPARTMENT OF TRANSPORTATION DIVISION OF HIGHWAYS RALEIGH, N.C.

ENGLISH DETAIL DRAWING FOR **GUARDRAIL INSTALLATION**

SHEET 2 OF 7 **862D02**

NORTH CAROLINA PROFESSIONAL SEAL 19761 ENGINEER CYNTHIA B. PERRY 11/14/04

DESIGN SERVICES UNIT
STANDARDS AND SPECIAL DESIGN
Office 919-250-4128 FAX 919-250-4119

SEE PLATE FOR TITLE

ORIGINAL BY: 2002 STD.862.02 DATE:
MODIFIED BY: E. E. WARD DATE: 02-09-03
CHECKED BY: [illegible] DATE: 5-03
FILE SPEC.: /usr/stds/02todetail/english/86202/862d02.dgn

22-MAY-2003 10:17
W:\Special Details\ericward\stds\02' Stds to Special Details\english\86202\0862d02.dgn
ericward AT DS212260

5/14/99