KCI Associates of North Carolina, P.A.
RALEIGH OFFICE
ENGINEERS ● PLANNERS ● ECOLOGISTS

SUITE 220, LANDMARK CENTER II
4601 SIX FORKS RD.
RALEIGH, N.C. 27609-5210
(919) 783-9214

PROJECT REFERENCE NO.	SHEET NO.
B-3451	2-C
R/W SHEET NO.	
ROADWAY DESIGN ENGINEER	HYDRAULICS ENGINEER

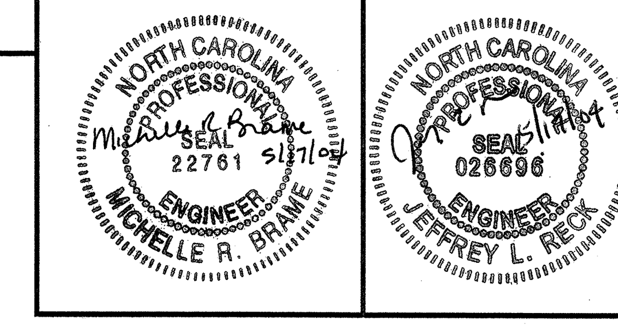

REVISIONS

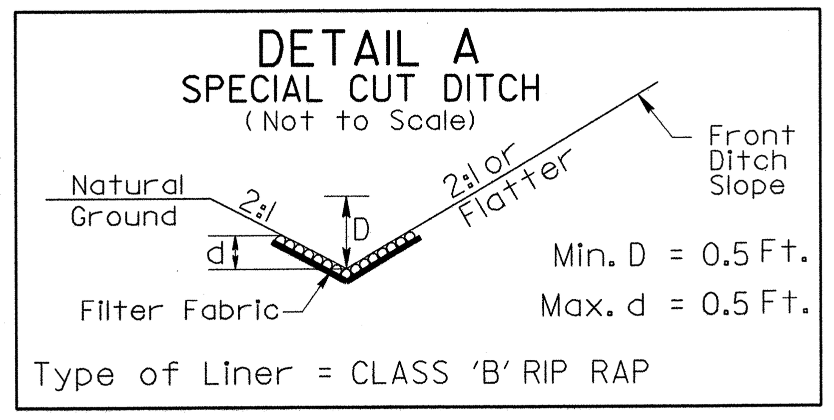

-DETOUR- RT 15+00 TO 16+50 - DT. GR. SEE PROF. SHT. 6

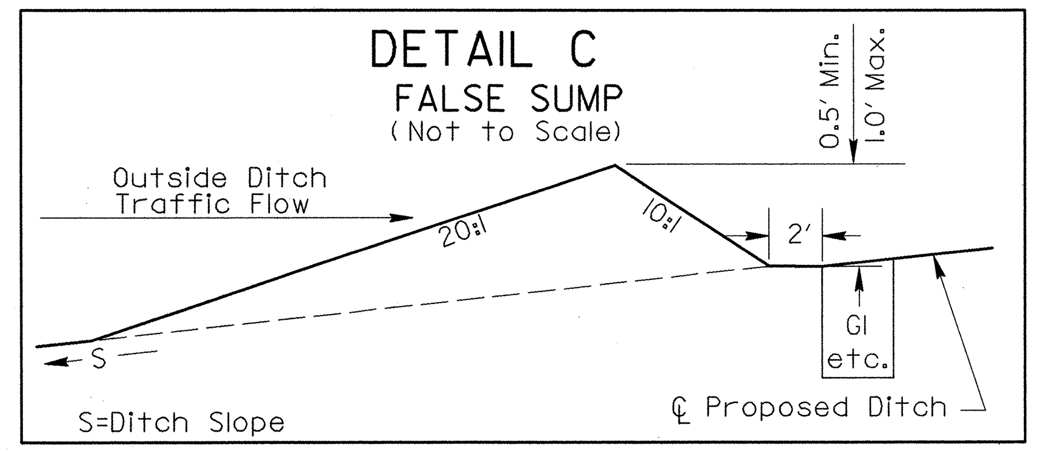

-DETOUR- LT 15+31.24

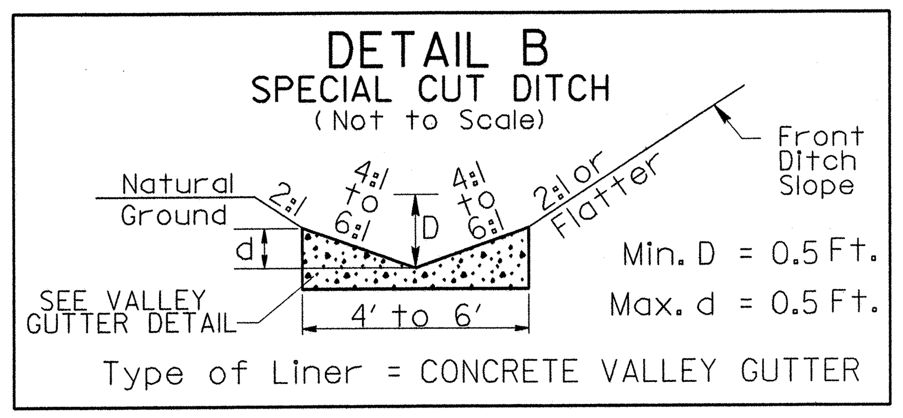

-DETOUR- LT 13+00 TO 15+17.75 - DT. GR. SEE PROF. SHT. 6

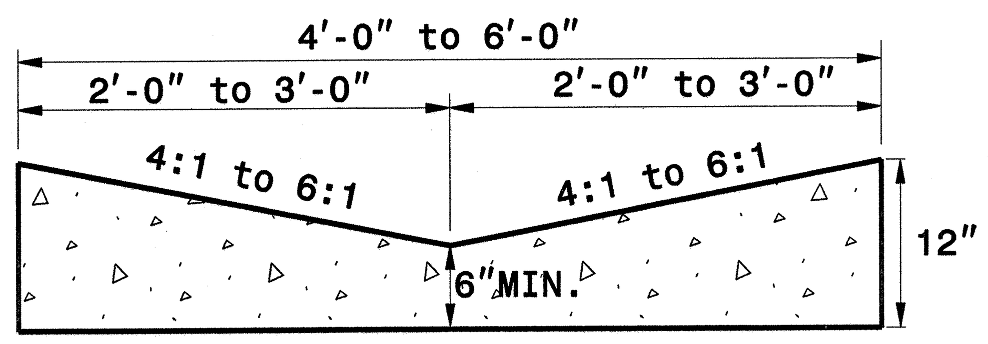

VALLEY GUTTER

$$$$$SYSTIME$$$$$
$$$$$$$$$$DGN$$$$$$$$$$$$$$$$
$$$$USERNAME$$$$