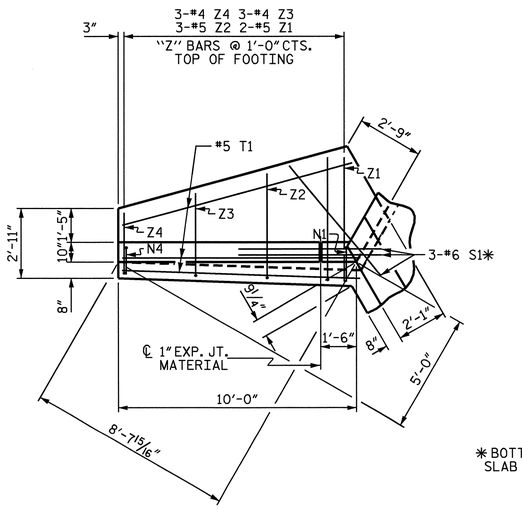

PLAN W2

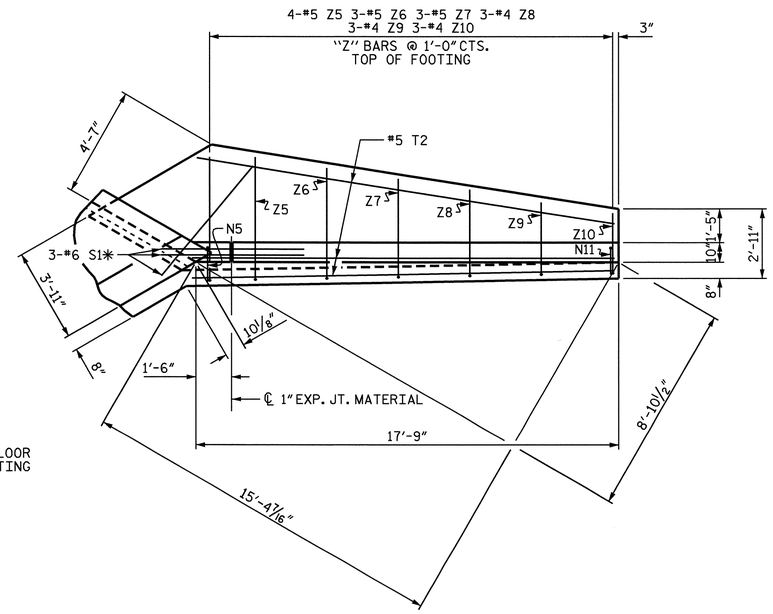

PLAN W1

*BOTTOM OF FLOOR SLAB AND FOOTING

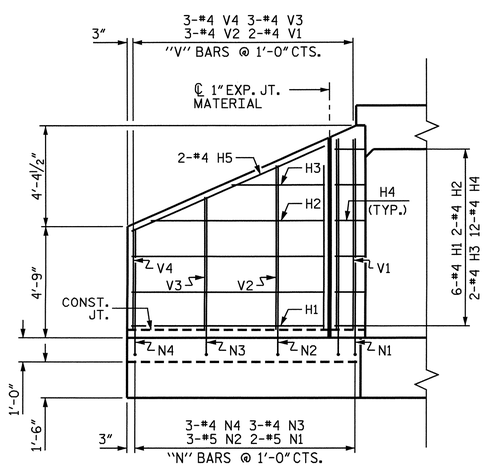

ELEVATION W2

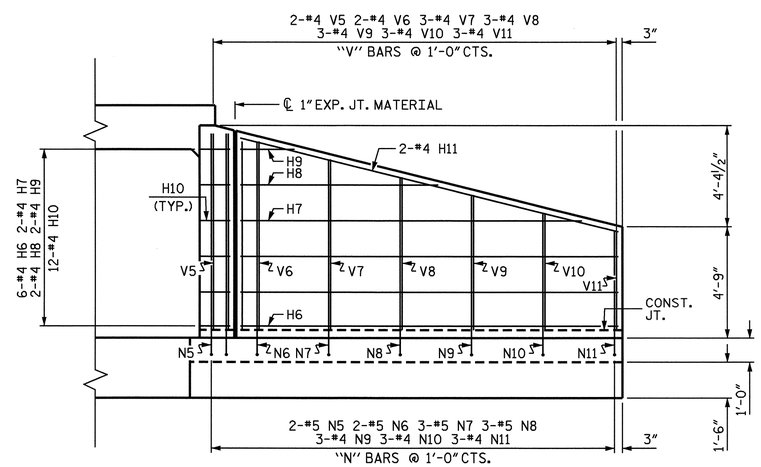

ELEVATION W1

BAR TYPES

ALL BAR DIMENSIONS ARE OUT TO OUT.

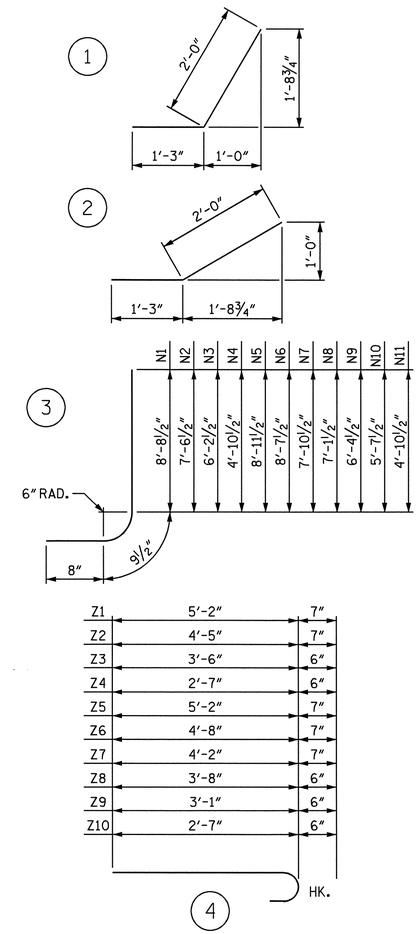

BILL OF MATERIAL

BAR	NO	SIZE	TYPE	LENGTH	WEIGHT
H1	6	4	STR	8'-1"	32
H2	2	4	STR	7'-3"	10
H3	2	4	STR	3'-11"	5
H4	12	4	1	3'-3"	26
H5	2	4	STR	8'-10"	12
H6	6	4	STR	15'-10"	63
H7	2	4	STR	14'-4"	19
H8	2	4	STR	8'-3"	11
H9	2	4	STR	2'-3"	3
H10	12	4	2	3'-3"	26
H11	2	4	STR	16'-4"	22
N1	2	5	3	10'-2"	21
N2	3	5	3	9'-0"	28
N3	3	4	3	7'-8"	15
N4	3	4	3	6'-4"	13
N5	2	5	3	10'-5"	22
N6	2	5	3	10'-1"	21
N7	3	5	3	9'-4"	29
N8	3	5	3	8'-7"	27
N9	3	4	3	7'-10"	16
N10	3	4	3	7'-1"	14
N11	3	4	3	6'-4"	13
S1	6	6	STR	6'-0"	54
T1	3	5	STR	10'-0"	31
T2	3	5	STR	17'-9"	56
V1	2	4	STR	8'-1"	11
V2	3	4	STR	7'-0"	14
V3	3	4	STR	5'-8"	11
V4	3	4	STR	4'-4"	9
V5	2	4	STR	8'-4"	11
V6	2	4	STR	8'-0"	11
V7	3	4	STR	7'-3"	15
V8	3	4	STR	6'-6"	13
V9	3	4	STR	5'-9"	12
V10	3	4	STR	5'-0"	10
V11	3	4	STR	4'-3"	9
Z1	2	5	4	5'-9"	12
Z2	3	5	4	5'-0"	16
Z3	3	4	4	4'-0"	8
Z4	3	4	4	3'-1"	6
Z5	4	5	4	5'-9"	24
Z6	3	5	4	5'-3"	16
Z7	3	5	4	4'-9"	15
Z8	3	4	4	4'-2"	8
Z9	3	4	4	3'-7"	7
Z10	3	4	4	3'-1"	6

REINFORCING STEEL FOR 2 WINGS 833 LBS.

CLASS A CONCRETE
2 WINGS 12.2 CY
1 HEADWALLS 1.2 CY
1 END CURTAIN WALLS 0.9 CY
TOTAL 14.3 CY

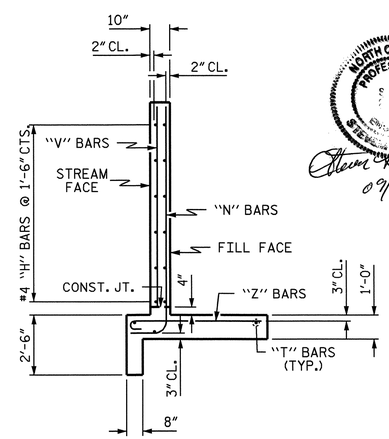

TYPICAL WING SECTION

PROJECT NO. B-3424
CABARRUS COUNTY
STATION: 13+14.00 -L-

SHEET 10 OF 11

STATE OF NORTH CAROLINA
DEPARTMENT OF TRANSPORTATION
RALEIGH

STANDARD WINGS FOR CONCRETE BOX CULVERT

H = 8'-0" SLOPE = 2:1
60° SKEW

REVISIONS						SHEET NO.
NO.	BY:	DATE:	NO.	BY:	DATE:	C-10
1			3			TOTAL SHEETS
2			4			11

ASSEMBLED BY :	M. A. ALLEN	DATE :	3-04
CHECKED BY :	SWANcePE	DATE :	4-04
DRAWN BY :	CCJ	11/99	
CHECKED BY :	RWW	03/00	

STD. NO. CW6008