14-MAY-2003 14:01
W:\Special Details\ericward\stds\02' Stds to Special Details\english\86202\0862d02.dgn
.ericward AT DS188660

5/14/99

STATE OF NORTH CAROLINA
DEPT. OF TRANSPORTATION
DIVISION OF HIGHWAYS
RALEIGH, N.C.

ENGLISH DETAIL DRAWING FOR
GUARDRAIL INSTALLATION

SHEET 5 OF 7
862D02

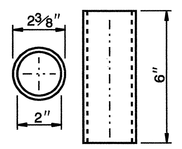

BREAKAWAY TERMINAL POST SLEEVE

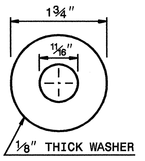

DETAIL OF STANDARD WASHER

STANDARD WASHER: TYPICAL USE UNDER NUT WITH WOOD POST

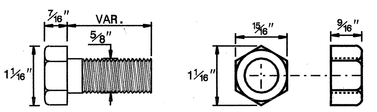

DETAIL OF STANDARD HEX BOLT AND NUT

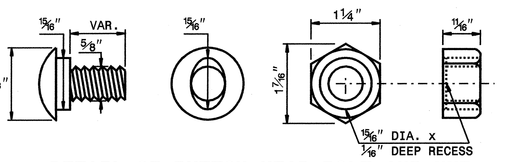

DETAIL OF BUTTON HEAD BOLT AND NUT

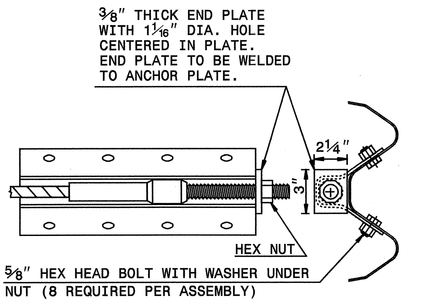

ANCHOR PLATE ASSEMBLY

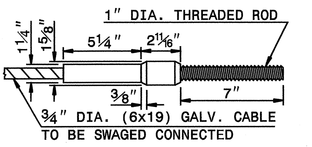

SWAGED CABLE

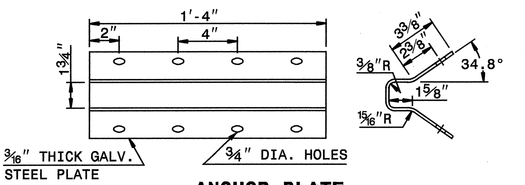

ANCHOR PLATE

CABLE ASSEMBLY

SYSTEM PARTS

STATE OF NORTH CAROLINA
DEPT. OF TRANSPORTATION
DIVISION OF HIGHWAYS
RALEIGH, N.C.

ENGLISH DETAIL DRAWING FOR
GUARDRAIL INSTALLATION

SHEET 5 OF 7
862D02

STATE OF NORTH CAROLINA
DEPT. OF TRANSPORTATION
DIVISION OF HIGHWAYS
RALEIGH, N.C.

ENGLISH DETAIL DRAWING FOR
GUARDRAIL INSTALLATION

SHEET 6 OF 7
862D02

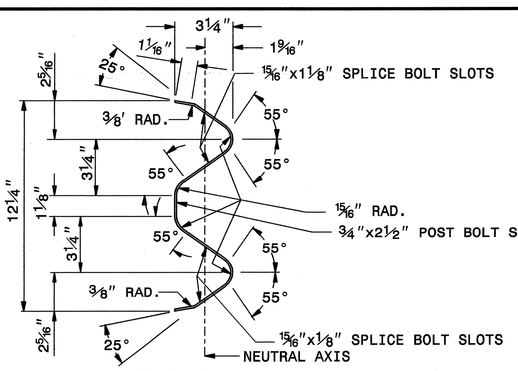

SECTION X-X

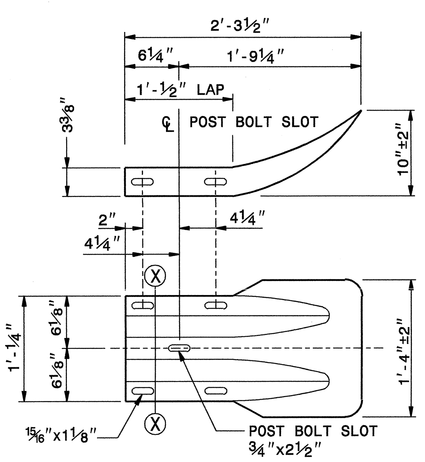

TERMINAL END SECTION

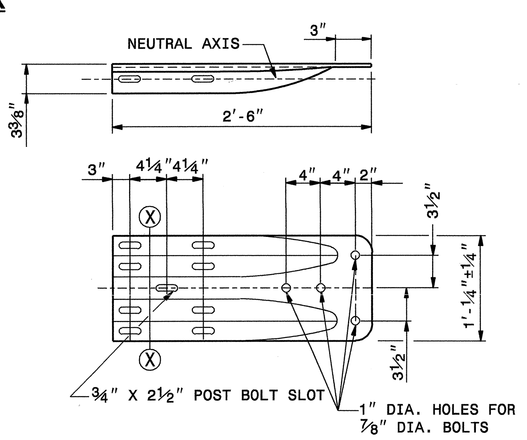

TYPICAL END SHOE

SYSTEM PARTS - GENERAL USE

STATE OF NORTH CAROLINA
DEPT. OF TRANSPORTATION
DIVISION OF HIGHWAYS
RALEIGH, N.C.

ENGLISH DETAIL DRAWING FOR
GUARDRAIL INSTALLATION

SHEET 6 OF 7
862D02

DESIGN SERVICES UNIT
STANDARDS AND SPECIAL DESIGN
Office 919-250-4128 FAX 919-250-4119

SEE PLATE FOR TITLE

ORIGINAL BY: 2002 STD. 862.02 DATE:
MODIFIED BY: E.E. WARD DATE: 02-09-03
CHECKED BY: DATE: 5-03
FILE SPEC.: /usr/s/dgn/ericward/english/86202/862d02.dgn

NORTH CAROLINA PROFESSIONAL ENGINEER SEAL 19161 CHARLIA B. PERRY
5/12/04

PROJECT REFERENCE NO. B-4139
SHEET NO. 2-F