| PROJECT REFERENCE NO. | SHEET NO. |
|---|---|
| U-4010 | UC-4 |
| DESIGNED BY: MDS | |
| DRAWN BY: MDS | |
| CHECKED BY: CDB | |
| APPROVED BY: CDB | |
| REVISED: | |
| NORTH CAROLINA DEPARTMENT OF TRANSPORTATION | |
| DESIGN SERVICES UNIT PHONE:(919)250-4128 FAX:(919)250-4119 | UTILITY CONSTRUCTION PLANS ONLY |

NORTH CAROLINA PROFESSIONAL ENGINEER 23041 COREY D. BOUSQUET

# UTILITY CONSTRUCTION

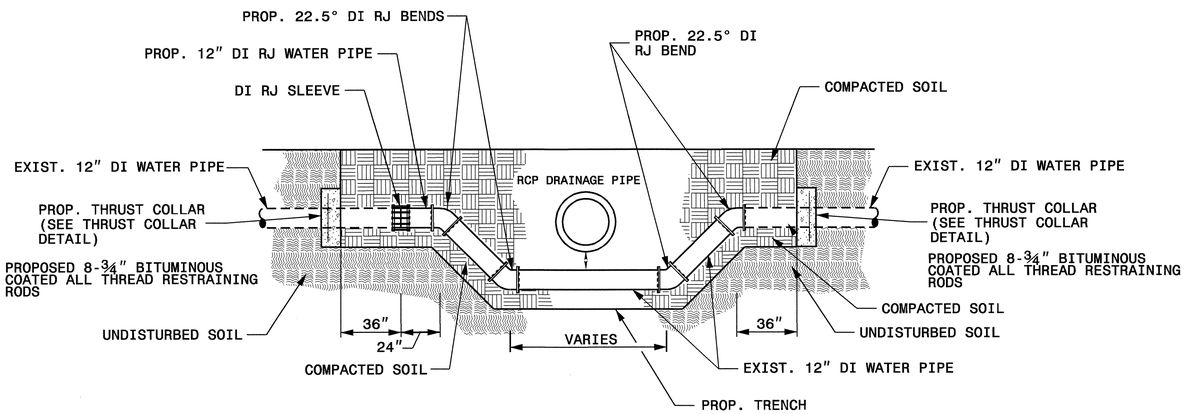


## WATER PIPE CROSSING STORM DRAIN

## TYPE "2"

(BEDDING FOR D.I. PIPE)

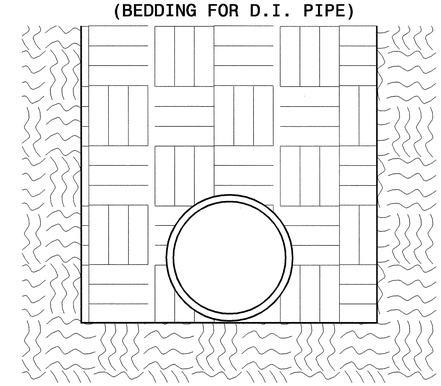

PIPE BEDDED IN FLAT-BOTTOM TRENCH. TRENCH BACKFILLED IN LOOSE 6" LAYERS COMPACTED TO TOP OF TRENCH USING LOCAL EXCAVATED MATERIAL, IF APPROVED BY THE ENGINEER, OR SELECT MATERIAL. ALL MATERIAL SHALL BE FREE OF ROCKS, FOREIGN MATERIAL, AND FROZEN EARTH. COMPACTION SHALL BE TO APPROX. 95% DENSITY IN ACCORDANCE WITH AASHTO T-99 AS MODIFIED BY THE DEPARTMENT OF TRANSPORTATION.

NOTE:
THRUST COLLAR TO BE INSTALLED AND ALLOWED TO CURE A MINIMUM OF 3 DAYS PRIOR TO SHUTTING DOWN WATER MAIN OR FORCE MAIN FOR RELOCATION.

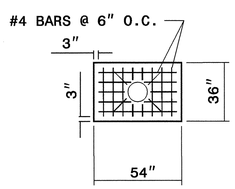


**SECTION A-A**

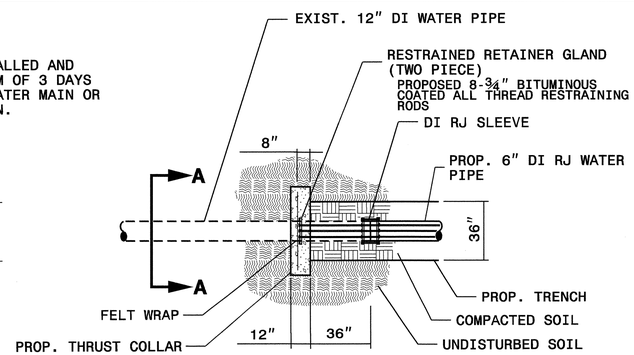


**PLAN VIEW**

## THRUST COLLAR DETAIL

MAXIMUM TRENCH WIDTH AT TOP OF PIPE

| NOMINAL PIPE SIZE (INCHES) | TRENCH WIDTH (INCHES) | NOMINAL PIPE SIZE (INCHES) | TRENCH WIDTH (INCHES) |
|---|---|---|---|
| 4 | 28 | 20 | 44 |
| 6 | 30 | 24 | 48 |
| 8 | 32 | 30 | 54 |
| 10 | 34 | 36 | 60 |
| 12 | 36 | 42 | 66 |
| 14 | 38 | 48 | 72 |
| 16 | 40 | 54 | 78 |
| 18 | 42 | | |

8/17/99
06-APR-2004 08:23
E:\Utilities\Proj\U4010_utUC_04.psh
mmouler AT MS214777