PROJECT REFERENCE NO.	SHEET NO.
B-3157	UC-7
DESIGNED BY: CSG	
DRAWN BY: CSG	
CHECKED BY: RBW	
APPROVED BY: RBW	
REVISED:	

NORTH CAROLINA DEPARTMENT OF TRANSPORTATION
DESIGN SERVICES UNIT
PHONE:(919)250-4128
FAX:(919)250-4119

NORTH CAROLINA PROFESSIONAL SEAL 10157 ENGINEER RONALD B. WILKINS

UTILITY CONSTRUCTION PLANS ONLY

UTILITY CONSTRUCTION
NTS

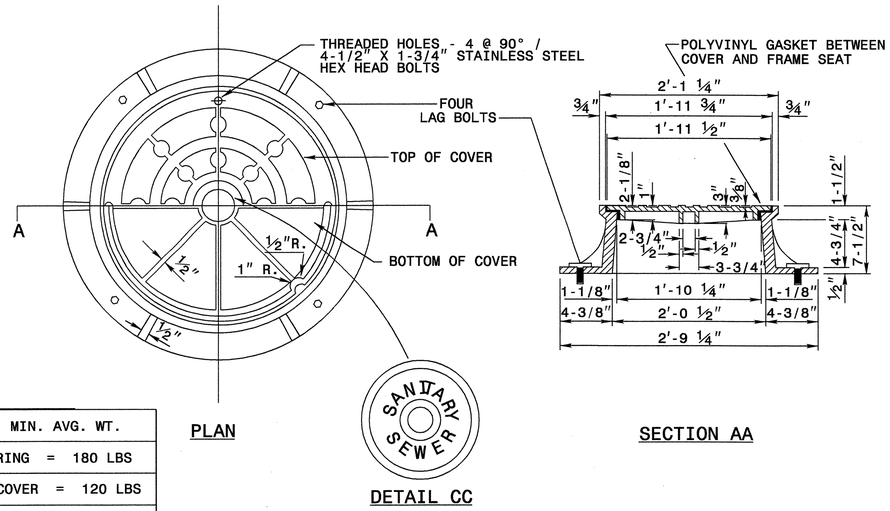

MIN. AVG. WT.
RING = 180 LBS
COVER = 120 LBS
TOTAL = 300 LBS

PLAN

DETAIL CC

SECTION AA

MANHOLE RING AND COVER
FOR WATERTIGHT MANHOLES

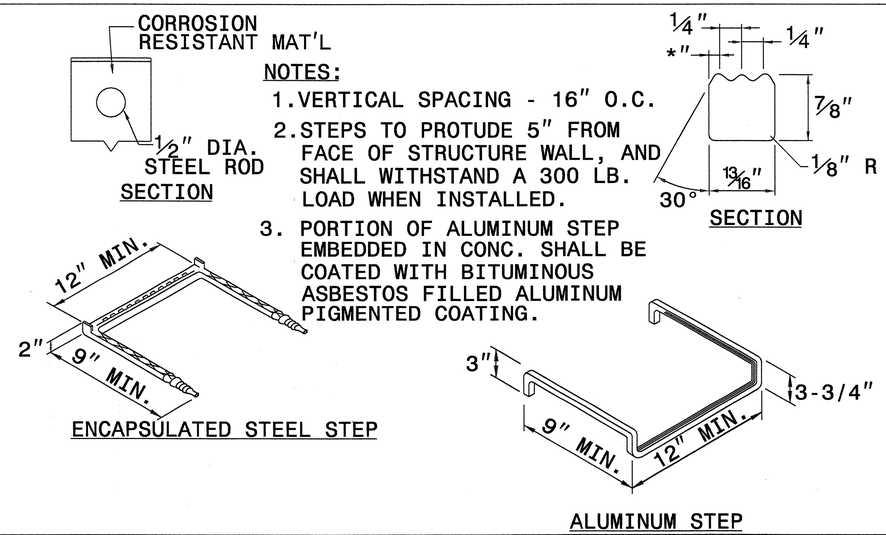

MANHOLE STEPS

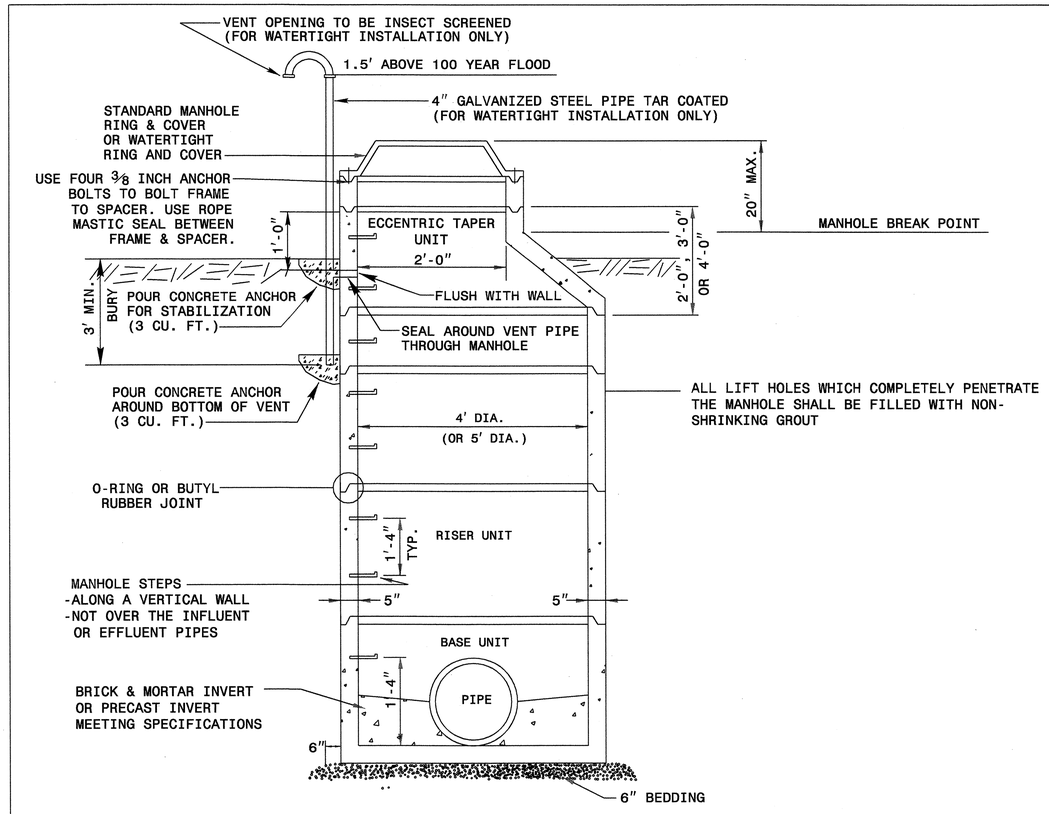

PRECAST CONCRETE MANHOLE

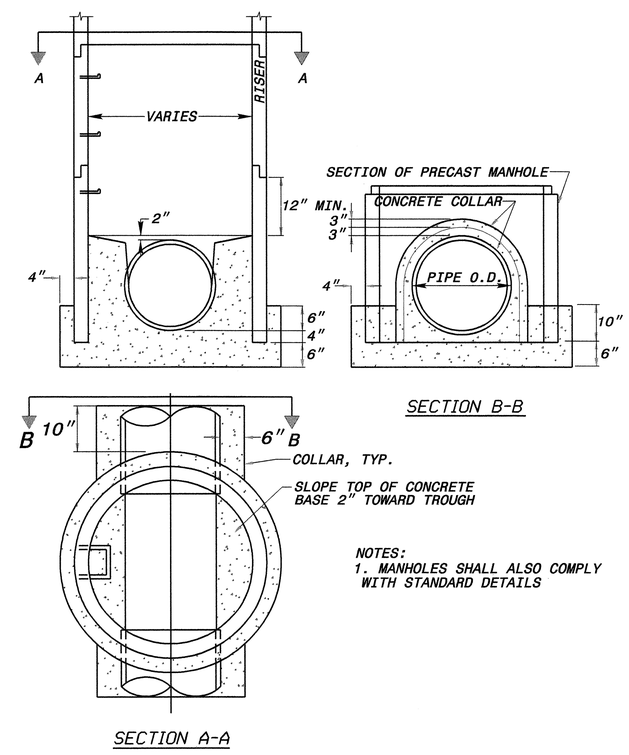

PRECAST SANITARY SEWER MANHOLE INSTALLED OVER EXISTING PIPE

8/17/99
05-AUG-2003 12:25
W:\Utilities\rbwlegsp\proj\projects\B3157\B3157DETAIL.dgn
cpowell