PROJECT REFERENCE NO.	SHEET NO.
U-0620	UC-21
DESIGNED BY: DMP	
DRAWN BY: DMP	
CHECKED BY: DMP	
APPROVED BY:	
REVISED:	
NORTH CAROLINA DEPARTMENT OF TRANSPORTATION	
DESIGN SERVICES UNIT PHONE:(919)250-4128 FAX:(919)250-4119	UTILITY CONSTRUCTION PLANS ONLY

NORTH CAROLINA PROFESSIONAL SEAL 10117 ENGINEER RANDOLPH MCPHILLIPS

UTILITY CONSTRUCTION

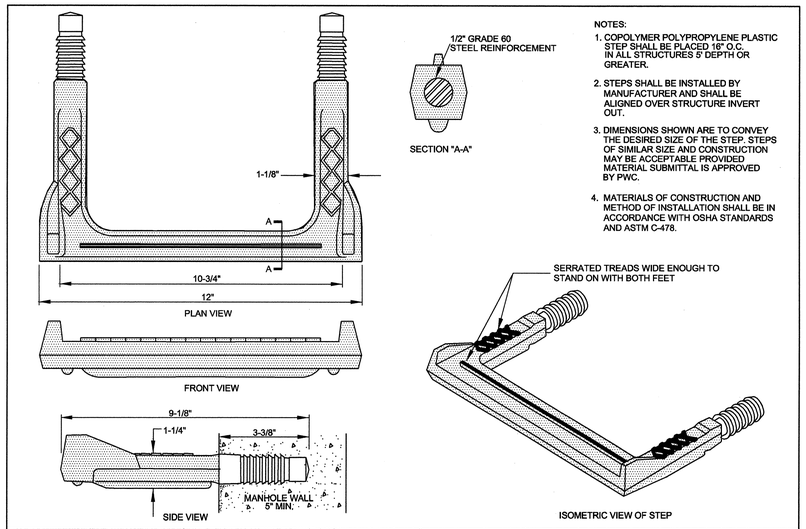

NOTES:

1. COPOLYMER POLYPROPYLENE PLASTIC STEP SHALL BE PLACED 16" O.C. IN ALL STRUCTURES 5' DEPTH OR GREATER.
2. STEPS SHALL BE INSTALLED BY MANUFACTURER AND SHALL BE ALIGNED OVER STRUCTURE INVERT OUT.
3. DIMENSIONS SHOWN ARE TO CONVEY THE DESIRED SIZE OF THE STEP. STEPS OF SIMILAR SIZE AND CONSTRUCTION MAY BE ACCEPTABLE PROVIDED MATERIAL SUBMITTAL IS APPROVED BY PWC.
4. MATERIALS OF CONSTRUCTION AND METHOD OF INSTALLATION SHALL BE IN ACCORDANCE WITH OSHA STANDARDS AND ASTM C-478.

STRUCTURE STEP			PUBLIC WORKS COMMISSION FAYETTEVILLE, N.C.	NO	DATE	REVISION
SHEET NO. 1 OF 1	DWG. NO. S.8	DWG. BY PWC	WATER RESOURCES ENGINEERING DEPARTMENT			
	DATE NOV. 01, 2003	APPROVED BY J.E.G.				

FILE NAME: STEP.DWG

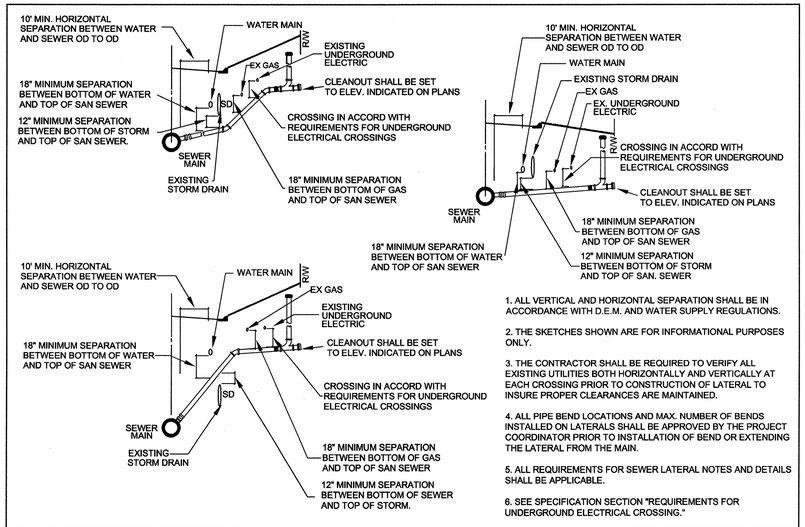

1. ALL VERTICAL AND HORIZONTAL SEPARATION SHALL BE IN ACCORDANCE WITH D.E.M. AND WATER SUPPLY REGULATIONS.
2. THE SKETCHES SHOWN ARE FOR INFORMATIONAL PURPOSES ONLY.
3. THE CONTRACTOR SHALL BE REQUIRED TO VERIFY ALL EXISTING UTILITIES BOTH HORIZONTALLY AND VERTICALLY AT EACH CROSSING PRIOR TO CONSTRUCTION OF LATERAL TO INSURE PROPER CLEARANCES ARE MAINTAINED.
4. ALL PIPE BEND LOCATIONS AND MAX. NUMBER OF BENDS INSTALLED ON LATERALS SHALL BE APPROVED BY THE PROJECT COORDINATOR PRIOR TO INSTALLATION OF BEND OR EXTENDING THE LATERAL FROM THE MAIN.
5. ALL REQUIREMENTS FOR SEWER LATERAL NOTES AND DETAILS SHALL BE APPLICABLE.
6. SEE SPECIFICATION SECTION "REQUIREMENTS FOR UNDERGROUND ELECTRICAL CROSSING."

SEWER SERVICE LATERAL UTILITY CONFLICT SEPARATION REQUIREMENTS			PUBLIC WORKS COMMISSION FAYETTEVILLE, N.C.	NO	DATE	REVISION
SHEET NO. 1 OF 1	DWG. NO. S.12	DWG. BY PWC	WATER RESOURCES ENGINEERING DEPARTMENT			
	DATE NOV. 01, 2003	APPROVED BY J.E.G.				

FILE NAME: UTIL CONFLICT.DWG

NOTE: THESE PWC STANDARDS HAVE BEEN MODIFIED BY THE NCDOT.

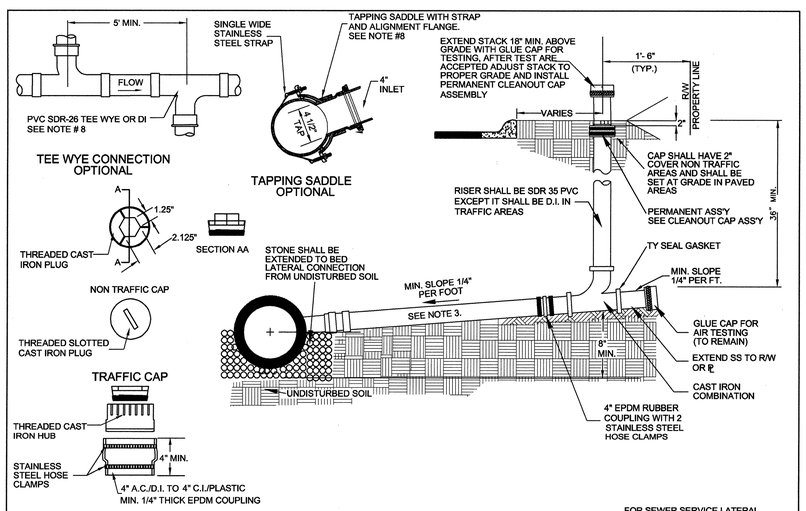

FOR SEWER SERVICE LATERAL NOTES SEE SHEET 2 OF 2

SEWER SERVICE LATERAL			PUBLIC WORKS COMMISSION FAYETTEVILLE, N.C.	NO.	DATE	REVISION
SHEET NO. 1 OF 2	DWG. NO. S.10	DWG. BY PWC	WATER RESOURCES ENGINEERING DEPARTMENT	1	MAR. 03	REMOVED BEND FROM LATERAL
	DATE NOV. 01, 2003	APPROVED BY J.E.G.				

FILE NAME: RESSLAT.DWG

SEWER SERVICE LATERAL NOTES

1. CONTRACTOR SHALL MAKE UP STACK AND SUBMIT TO ENGINEER FOR APPROVAL AND SHALL SUBMIT TAPPING SADDLE IF USED TO ENGINEER FOR APPROVAL.
2. HOLE IN SANITARY SEWER MAIN MUST BE CUT WITH APPROVED CUTTER. NO HAMMER TAPS ALLOWED
3. LATERAL SHALL CONFORM TO ASTM SPECS. D-3034 SDR-35 UNLESS OTHERWISE INDICATED AS DUCTILE IRON.
4. ALL PIPE AND FITTINGS SHALL BE 4" UNLESS OTHERWISE SPECIFIED.
5. ALL CAST IRON PIPE SHALL BE C.I. SOIL PIPE SERVICE WEIGHT OR D.I. UNLESS OTHERWISE SPECIFIED, INTERIOR LINING OF CERAMIC EPOXY OR FUSED CALCIUM ALUMINATE CEMENT WITH FUSED CALCIUM ALUMINATE AGGREGATES .
6. ALL CONNECTIONS SHALL HAVE RUBBER GASKET SEALS INSTALLED.
7. SANITARY SEWER SERVICE C/O STACK SHALL BE LOCATED 18" FROM WATER SERVICE LOCK VALVE WHEN IN SAME DITCH.
8. THE CONTRACTOR MAY USE A TAPPING SADDLE WITH STRAPS & ALIGNMENT FLANGE FOR CONNECTION TO PIPE. TAPPING SADDLES WITHOUT AN ALIGNMENT FLANGE WILL NOT BE ACCEPTABLE. THE CONTRACTOR MAY USE SDR 26 P.V.C. TEE-WYE FOR CONNECTION TO SDR 26 P.V.C. PIPE OR DI TEE FOR CONNECTION TO DUCTILE IRON PIPE.
9. INSTALLATION OTHER THAN AS SHOWN MUST BE APPROVED BY THE ENGINEER.
10. TAPPING PROCESS SHOWN SHALL BE USED FOR ALL SANITARY SEWER MAINS.
11. SLOPE AND DEPTH OF THE SERVICE LATERAL SHALL BE DETERMINED BY THE TOPOGRAPHY OF THE LOT AS APPROVED BY THE ENGINEER.
12. IF LATERAL IS MORE THAN 30' IN LENGTH IT SHALL CONFORM TO THE 1/4" PER FOOT MINIMUM SLOPE. MAXIMUM CLEAN OUT SPACING FOR 4" PIPE 75', 6" PIPE 100'
13. SEE INTERIOR DROP STRUCTURE OR SLIDE, MORTAR SLIDE & SHELF DETAIL FOR VERTICAL DROPS OF MAINS AND LATERALS.
14. LATERALS GREATER THAN 20' DEPTH SHALL UTILIZE DUCTILE IRON PIPE AND FITTINGS WITH CERAMIC EPOXY OR FUSED CALCIUM ALUMINATE CEMENT WITH FUSED CALCIUM ALUMINATE AGGREGATES .
15. ENTIRE SEWER LATERAL ASSEMBLY SHALL BE AIR TESTED CONCURRENTLY WITH SEWER MAIN.
16. INDIVIDUAL LATERALS SHALL BE CLEANED AND FLUSHED PRIOR TO FLUSHING SANITARY SEWER MAINS.
17. LATERAL SHALL NOT BE BACK-FILLED UNTIL INSPECTED BY THE ENGINEER.
18. USE WYE CONNECTIONS WHEN TYING MORE THAN 4 SERVICES INTO A MANHOLE TO AVOID COMPROMISING THE INTEGRITY OF THE MANHOLE.
19. IF BENDS ARE APPROVED BY THE PROJECT COORDINATOR, STONE BEDDING IS REQUIRED TO BE INSTALLED FROM UNDISTURBED SOIL TO BOTTOM OF BEND. (SEE DETAIL S.12)

SEWER SERVICE LATERAL NOTES			PUBLIC WORKS COMMISSION FAYETTEVILLE, N.C.	NO.	DATE	REVISION
SHEET NO. 2 OF 2	DWG. NO. S.11	DWG. BY PWC	WATER RESOURCES ENGINEERING DEPARTMENT	1	MAR. 03	ADDED NOTE #19
	DATE NOV. 01, 2003	APPROVED BY J.E.G.				

FILE NAME: RESSLAT.DWG

UTILITY CONSTRUCTION PLANS DESIGNED BY:
DAVIS-MARTIN-POWELL & ASSOC., INC.
ENGINEERING-LAND PLANNING-SURVEYING
HIGH POINT, NORTH CAROLINA

DRAWING NAME: U:\DOT-UC\U620-UC\ACAD-DWGS-DETAILS\DETAIL.dwg - sheet 21 Jun 10, 2004 - 2:28pm