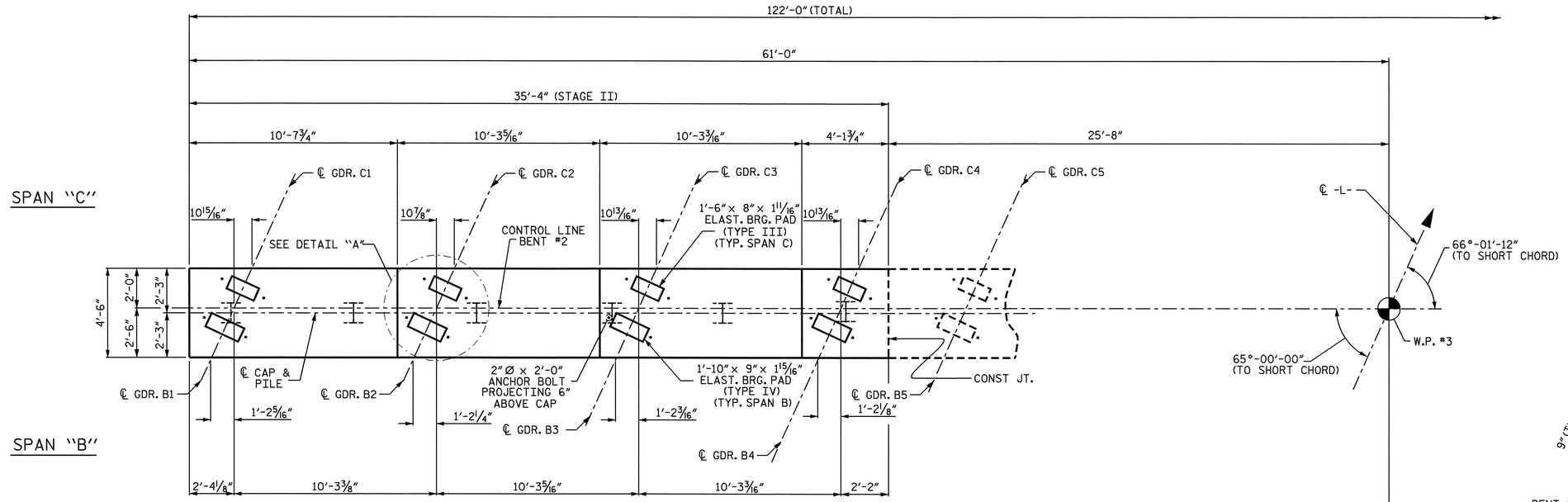

PLAN

NOTES

STIRRUPS IN CAP MAY BE SHIFTED AS NECESSARY TO CLEAR ANCHOR BOLTS.

"U" BARS IN THE END OF CAP MAY BE SHIFTED SLIGHTLY TO CLEAR "B" BARS.

THE CONTRACTOR'S ATTENTION IS CALLED TO THE FACT THAT THE CENTERLINE OF THE BENT IS OFFSET FROM THE BENT CONTROL LINE.

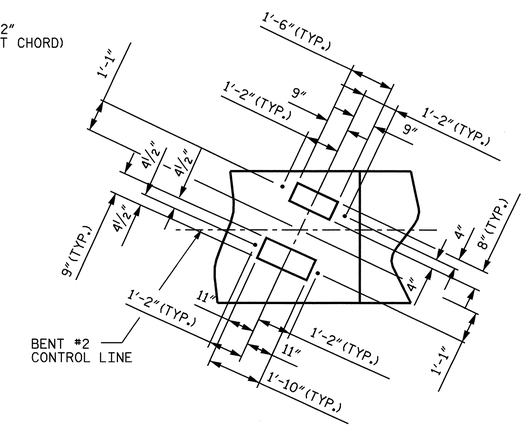

DETAIL "A"

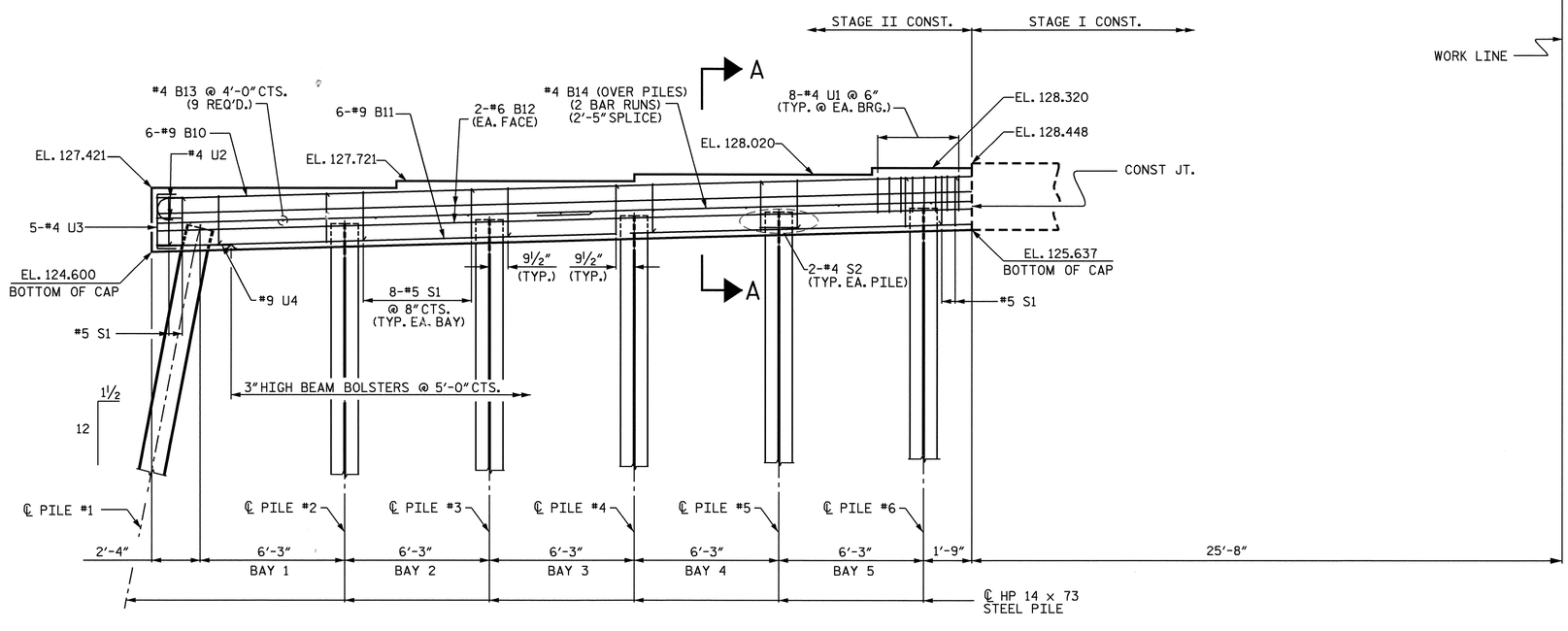

ELEVATION

NOTE: INVERT ALTERNATE STIRRUPS

TOP OF PILE ELEV.	
PILE No.	TOP OF PILE ELEV.
#1	125.668
#2	125.852
#3	126.035
#4	126.219
#5	126.402
#6	126.585

PROJECT NO. U-0620

CUMBERLAND COUNTY

STATION: 32+18.00 -L-

SHEET 2 OF 3

STATE OF NORTH CAROLINA
DEPARTMENT OF TRANSPORTATION
RALEIGH

SUBSTRUCTURE

BENT #2

(STAGE II)

NORTH CAROLINA PROFESSIONAL SEAL 15825 ENGINEER BRUCE D. KLAPPENBACH
8-16-04

REVISIONS						SHEET NO.
NO.	BY:	DATE:	NO.	BY:	DATE:	S-37
1			3			TOTAL SHEETS
2			4			129

DRAWN BY : J.B. WILSON DATE : 1/ 04
CHECKED BY : M.G. SHAIKH DATE : 2/ 04

16-AUG-2004 08:26
w:\squadl\U0620\Str1\jbwilson\Microstation\U-0620_sd_B*_02.dgn
mpatterson

STR. #1