SUPERSTRUCTURE REINFORCING STEEL LENGTHS ARE BASED ON THE FOLLOWING MINIMUM SPLICE LENGTHS

BAR SIZE	SUPERSTRUCTURE EXCEPT APPROACH SLABS, PARAPET, AND BARRIER RAIL		APPROACH SLABS		PARAPET AND BARRIER RAIL
	EPOXY COATED	UNCOATED	EPOXY COATED	UNCOATED	
#13	610	540	610	540	840
#16	770	660	770	660	1050
#19	920	790	1190	790	1330
#22	1580	1060			
#25	2080	1390			

REINFORCING BAR SCHEDULE

SPANS A, B & C

BAR	NO.	SIZE	TYPE	LENGTH	WEIGHT	BAR	NO.	SIZE	TYPE	LENGTH	WEIGHT
* A1	210	#16	STR.	11,640	3,794	B1	114	#16	STR.	13,720	2,427
A2	210	#16	STR.	11,640	3,794	* B2	28	#13	STR.	6,340	176
						* B3	56	#22	STR.	11,600	1,976
* A101	2	#16	STR.	10,620	33	* B4	50	#22	STR.	4,300	654
* A102	2	#16	STR.	9,500	29	* B5	28	#13	STR.	6,800	189
* A103	2	#16	STR.	8,400	26	* B6	28	#13	STR.	8,440	235
* A104	2	#16	STR.	7,300	23						
* A105	2	#16	STR.	6,200	19	* G1	2	#16	STR.	11,760	37
* A106	2	#16	STR.	5,100	16						
* A107	2	#16	STR.	3,980	12	* K1	8	#25	1	3,620	115
* A108	2	#16	STR.	2,880	9	* K2	12	#25	2	5,640	269
* A109	2	#16	STR.	1,780	6	K3	8	#19	STR.	2,000	36
* A110	2	#16	STR.	680	2	K4	8	#16	3	2,180	27
						K5	8	#16	STR.	2,040	25
A201	2	#16	STR.	11,380	35	K6	20	#13	STR.	5,640	112
A202	2	#16	STR.	11,280	35	K7	16	#13	STR.	1,860	30
A203	2	#16	STR.	9,180	28	K8	16	#13	STR.	1,980	31
A204	2	#16	STR.	8,080	25	K9	32	#13	STR.	2,220	71
A205	2	#16	STR.	6,960	22	K10	16	#13	STR.	2,020	32
A206	2	#16	STR.	5,860	18						
A207	2	#16	STR.	4,760	15	* S11	56	#16	4	1,460	127
A208	2	#16	STR.	3,660	11	* S12	56	#13	5	820	46
A209	2	#16	STR.	2,540	8	S13	28	#13	6	1,860	52
A210	2	#16	STR.	1,440	4	S14	208	#13	7	840	174
						* U1	16	#13	8	3,780	60
						* U2	40	#13	8	4,300	171

REINFORCING STEEL kg 7,012

* EPOXY COATED REINFORCING STEEL kg 8,024

"*" DENOTES EPOXY COATED REINFORCING STEEL

BAR TYPES

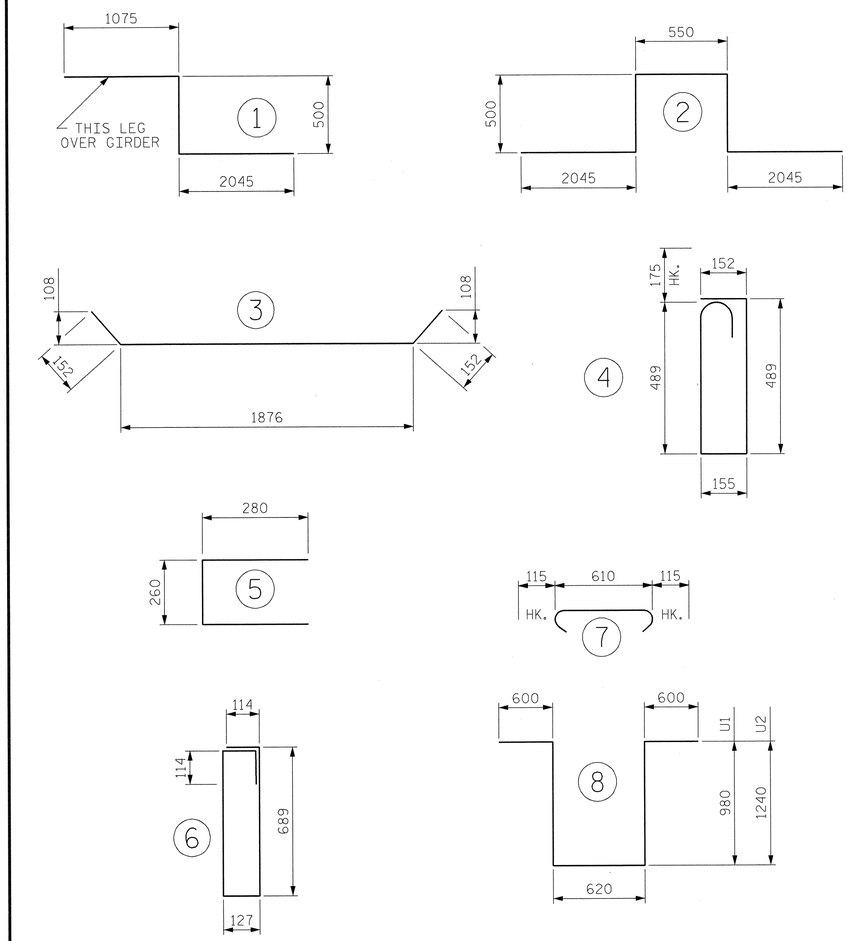

ALL BAR DIMENSIONS ARE OUT TO OUT

SUPERSTRUCTURE BILL OF MATERIAL

	CLASS AA CONCRETE	REINFORCING STEEL	EPOXY COATED REINFORCING STEEL
	(CU.METER)	(kg)	(kg)
SPANS A THRU C	161.1	7,012	8,024
TOTALS **	161.1	7,012	8,024

** QUANTITIES FOR BARRIER RAIL ARE NOT INCLUDED.

GROOVING BRIDGE FLOORS

BRIDGE DECK	389.6	SQ.METER
TOTAL	389.6	SQ.METER

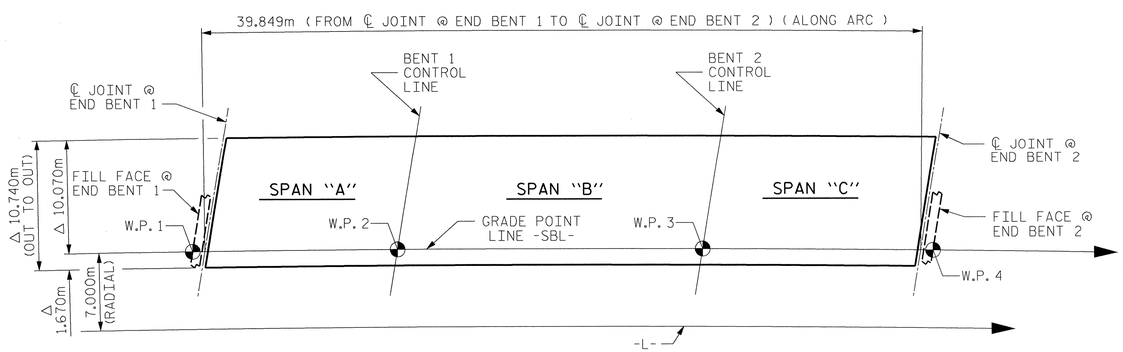

Δ DIMENSIONS ARE RADIAL THRU WORK POINTS.

LAYOUT FOR COMPUTING AREA OF REINFORCED CONCRETE DECK SLAB
(AREA = 467.8 SQ. METERS)

PROJECT NO. R-2610A
CHATHAM COUNTY
STATION: 18+04.666 -L-

SHEET 1 OF 2

NORTH CAROLINA PROFESSIONAL SEAL 11809 ENGINEER HONG-YAN PAO
11-18-03

STATE OF NORTH CAROLINA
DEPARTMENT OF TRANSPORTATION
RALEIGH

SUPERSTRUCTURE
BILL OF MATERIAL
(LEFT LANE BRIDGE)

REVISIONS						SHEET NO.
NO.	BY:	DATE:	NO.	BY:	DATE:	S-19
1			3			TOTAL SHEETS
2			4			82

Stantec Consulting Services Inc.
Suite 300, 801 Jones Franklin Road
Raleigh, NC
27606
Tel. 919.851.6866
Fax. 919.851.7024
www.stantec.com

DRAWN BY : M. J. OSTRISHKO DATE : 8-12-03
CHECKED BY : H. PAO DATE : 10-10-03

DRAWN BY : JMB 5/87
CHECKED BY : SJD 9/87
REV. 5/16/97 EEM/RGW

STR. #1

STD. NO. BOM1SM