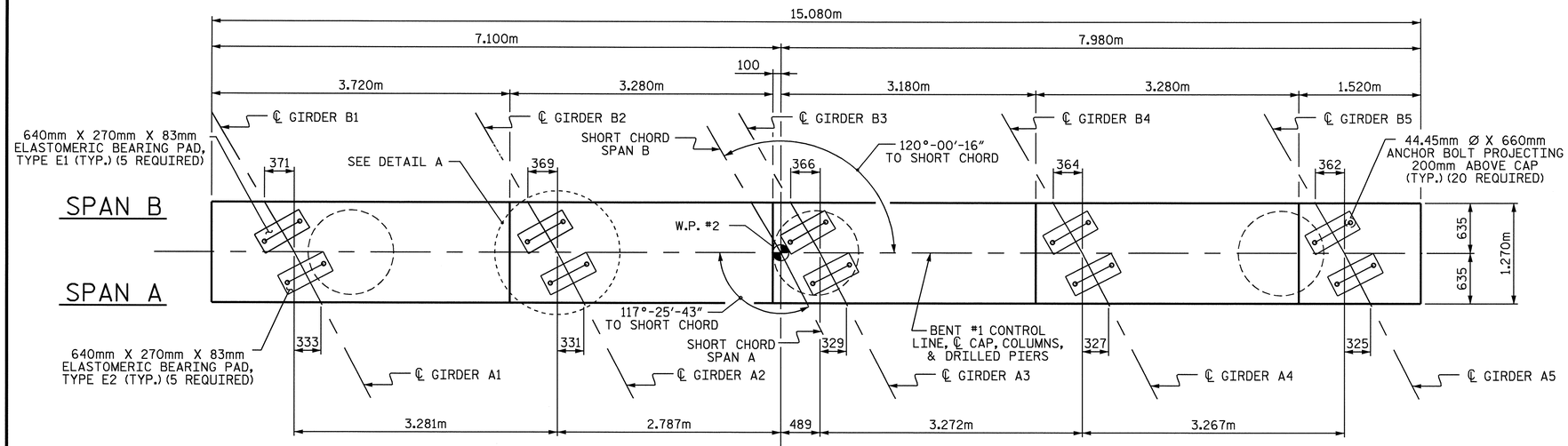

PLAN

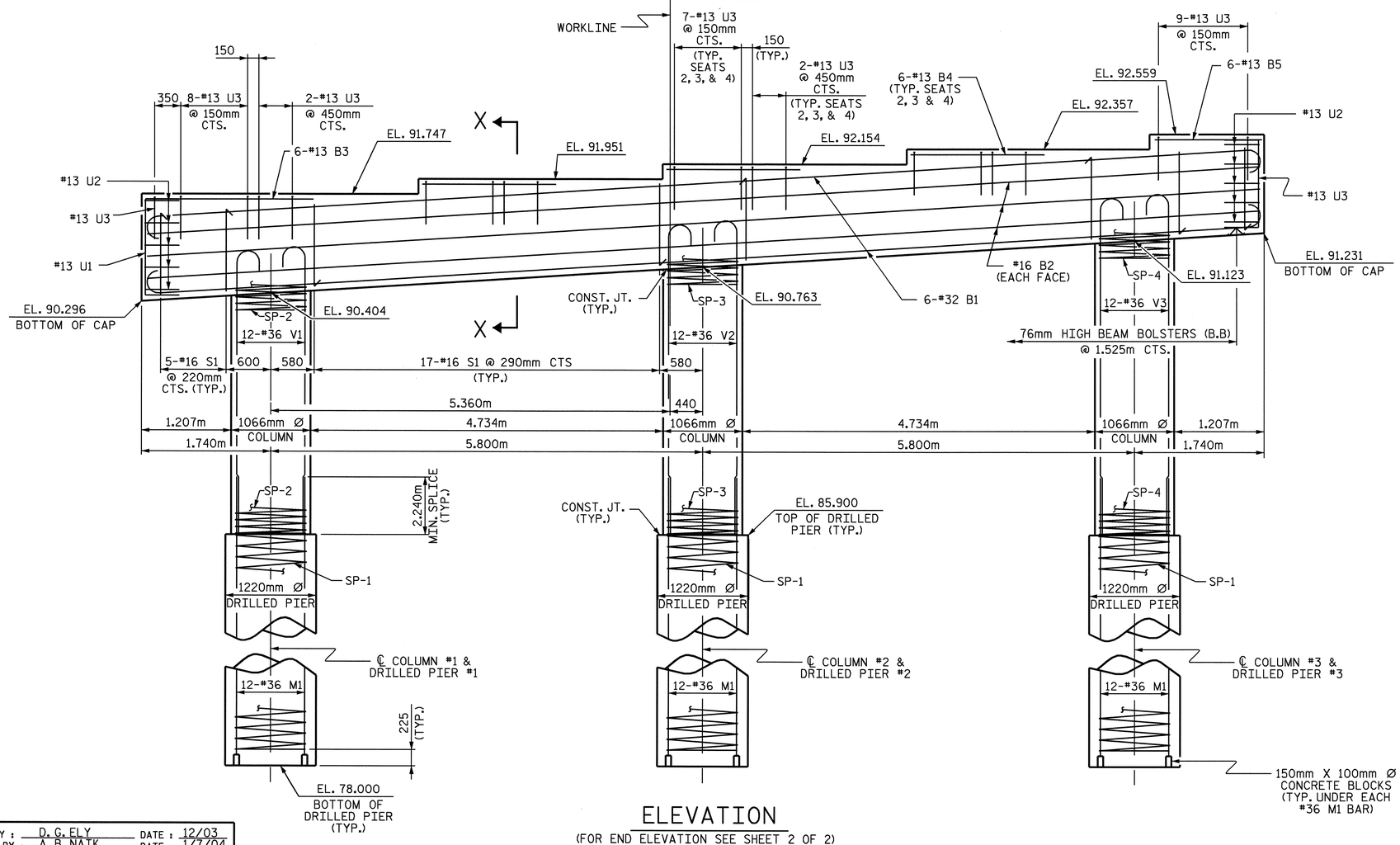

ELEVATION

(FOR END ELEVATION SEE SHEET 2 OF 2)

NOTES

STIRRUPS IN CAP MAY BE SHIFTED AS NECESSARY TO CLEAR ANCHOR BOLTS.

HOOKS ON "V" BARS MAY BE TURNED AS NECESSARY FOR PLACING REINFORCING STEEL.

FOR DRILLED PIERS, SEE SPECIAL PROVISIONS.

ALL STEEL IN THE DRILLED PIERS IS INCLUDED IN THE PAY ITEMS FOR "REINFORCING STEEL" AND "SPIRAL COLUMN REINFORCING STEEL".

THE CONTRACTOR'S ATTENTION IS CALLED TO THE FACT THAT THE LONGITUDINAL REINFORCEMENT FOR THE DRILLED PIERS IS DETAILED WITH ONE METER OF EXTRA LENGTH.

INVERT ALTERNATE STIRRUPS.

THE LOCATION OF THE CONSTRUCTION JOINT IN THE DRILLED PIERS IS BASED ON AN APPROXIMATE GROUND LINE ELEVATION. IF THE CONSTRUCTION JOINT IS ABOVE THE ACTUAL GROUND LINE ELEVATION, THE CONTRACTOR SHALL PLACE THE CONSTRUCTION JOINT 300mm BELOW THE GROUND LINE.

FOR EPOXY PROTECTIVE COATING, SEE SPECIAL PROVISIONS.

THE TOP SURFACE AREAS OF THE BENT CAP SHALL BE CURED IN ACCORDANCE WITH THE STANDARD SPECIFICATIONS EXCEPT THE MEMBRANE CURING COMPOUND METHOD SHALL NOT BE USED.

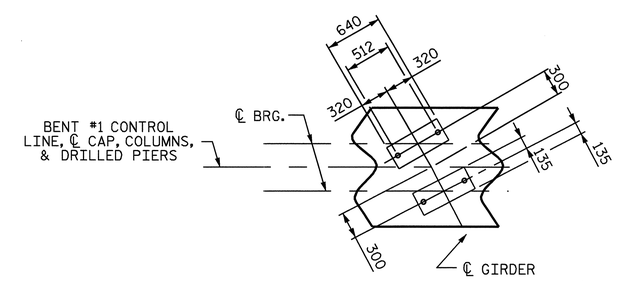

DETAIL A

PROJECT NO. B-1019

ANSON COUNTY

STATION: 14+94.156 -L-

SHEET 1 OF 2

STATE OF NORTH CAROLINA
DEPARTMENT OF TRANSPORTATION
RALEIGH

SUBSTRUCTURE

BENT #1

NORTH CAROLINA PROFESSIONAL SEAL 23926 ENGINEER BRIAN C. HANKS

7/1/04

REVISIONS						SHEET NO.
NO.	BY:	DATE:	NO.	BY:	DATE:	S-24
1			3			TOTAL SHEETS
2			4			35

DRAWN BY : D. G. ELY DATE : 12/03
CHECKED BY : A. B. NAIK DATE : 1/7/04

30-JUN-2004 15:41
W:\squadg\b1019\Stru\B1019_SD_B1_01.dgn
wparker