| METRIC | PROJECT REFERENCE NO. | SHEET NO. |
|---|---|---|
| | R-2911A | SIG. 22 |

## PHASING DIAGRAM

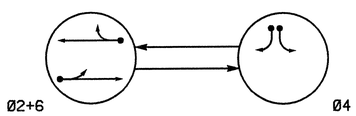


PHASING DIAGRAM DETECTION LEGEND

- DETECTED MOVEMENT
- UNDETECTED MOVEMENT (OVERLAP)
- UNSIGNALIZED MOVEMENT
- PEDESTRIAN MOVEMENT

## TABLE OF OPERATION

| SIGNAL FACE | PHASE Ø2+6 | PHASE Ø4 | PHASE FLASH |
|---|---|---|---|
| 21,22 | G | R | Y |
| 41,42 | R | G | R |
| 61,62 | G | R | Y |

## LOOP & DETECTOR UNIT INSTALLATION CHART

NEMA CONTROLLER WITH TS-2 CABINET

| INDUCTIVE LOOPS | | | | | | DETECTOR UNITS | | | | | | |
|---|---|---|---|---|---|---|---|---|---|---|---|---|
| LOOP NO. | SIZE (m) | TURNS | DIST. FROM STOPBAR (m) | NEW | EXISTING | NEMA PHASE | NEW | EXISTING | TIMING FEATURE | TIMING TIME | PLACE CALL DURING PHASE | INHIBIT DELAY DURING GREEN? |
| 2A | 1.8X1.8 | 6 | 130 | X | | 2 | X | | EXTEND | 2.3 SEC. | ALL | NO |
| 2B | 1.8X1.8 | 5 | 35 | X | | 2 | X | | - | - SEC. | ALL | NO |
| 4A | 1.8X18 | 2-4-2 | 0 | X | | 4 | X | | DELAY | 3 SEC. | ALL | YES |
| 4B | 1.8X18 | 2-4-2 | 0 | X | | 4 | X | | DELAY | 15 SEC. | ALL | YES |
| 6A | 1.8X1.8 | 6 | 130 | X | | 6 | X | | EXTEND | 2.3 SEC. | ALL | NO |
| 6B | 1.8X1.8 | 4 | 35 | X | | 6 | X | | - | - SEC. | ALL | NO |

2 PHASE ACTUATED
(ISOLATED)

## NOTES

1. Refer to "Roadway Standard Drawings NCDOT" dated January 2002 and "Standard Specifications for Roads and Structures" dated January 2002.
2. Set all detector units to presence mode.
3. Do not program signal for late night flashing operation unless otherwise directed by the Engineer.

## SIGNAL FACE I.D.

Denotes L.E.D.

300mm

21,22
41,42
61,62

## PLAN QUANTITIES

| Pay Item | Meters |
|---|---|
| Signal Cable | 230 |
| Messenger Cable | 170 |
| Lead-in Cable | 760 |

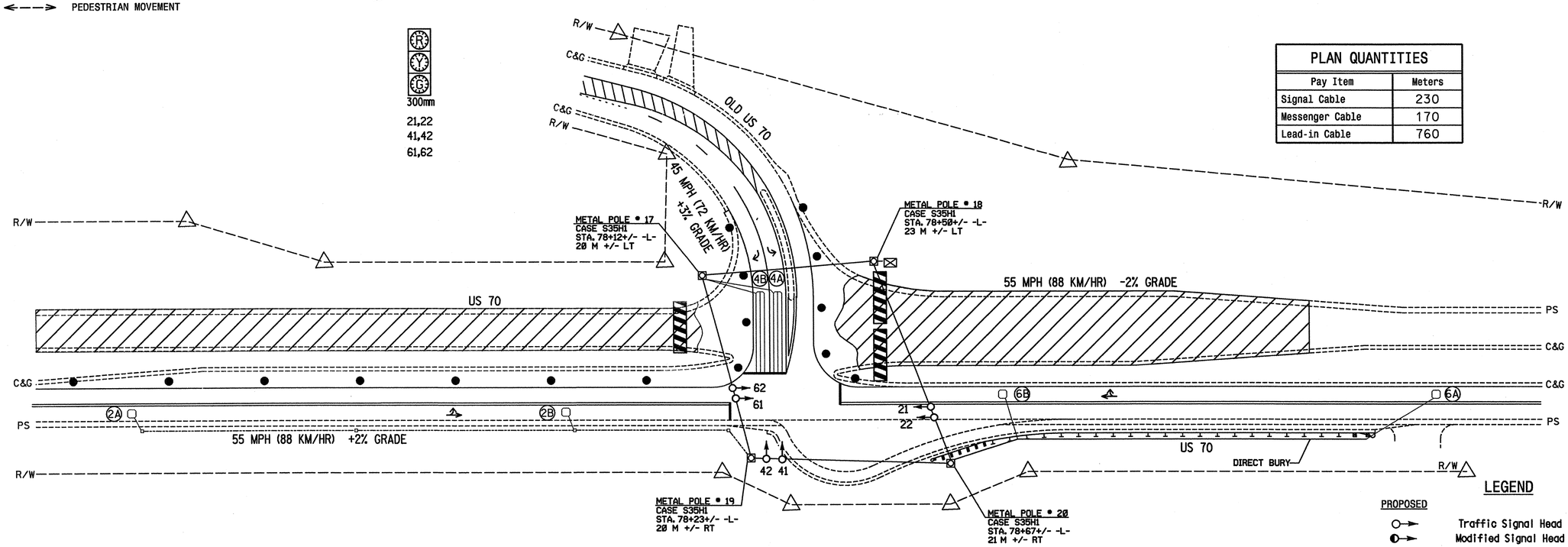


## LEGEND

| PROPOSED | | EXISTING |
|---|---|---|
| | Traffic Signal Head | |
| | Modified Signal Head | N/A |
| | Sign | |
| | Pedestrian Signal Head With Push Button & Sign | |
| | Signal Pole with Guy | |
| | Signal Pole with Sidewalk Guy | |
| | Inductive Loop Detector | |
| | Controller & Cabinet | |
| | Junction Box | |
| | 50mm Underground Conduit | |
| N/A | Right of Way with Marker | |
| | Directional Arrow | |
| | Pavement Marking Arrow | |
| | Metal Strain Pole | |
| | Construction Zone | |

## TIMING CHART

NEMA CONTROLLER

| PHASE | Ø2 | Ø4 | Ø6 |
|---|---|---|---|
| MINIMUM GREEN | 14 SEC. | 7 SEC. | 14 SEC. |
| PASSAGE/GAP | 2.0 SEC. | 1.0 SEC. | 2.0 SEC. |
| YELLOW CHANGE INT. | 5.4 SEC. | 4.7 SEC. | 5.4 SEC. |
| RED CLEARANCE | 1.5 SEC. | 1.5 SEC. | 1.5 SEC. |
| MAX. 1 | 45 SEC. | 20 SEC. | 45 SEC. |
| RECALL POSITION | MIN. RECALL | NONE | MIN. RECALL |
| VEHI. CALL MEMORY | LOCK | NONLOCK | LOCK |

NEW INSTALLATION-TEMPORARY


ARCADIS
G & M of North Carolina, Inc.
WWW.ARCADIS-US.COM
801 Corporate Center Drive, Suite 300
Raleigh, NC 27607-5073
Tel: 919/854-1282 Fax: 919/854-5448


Prepared in the Offices of:
Traffic Engineering and Safety Systems Branch
STATE OF NORTH CAROLINA DEPARTMENT OF TRANSPORTATION
Signals and Geometrics Section
122 N. McDowell St., Raleigh, NC 27603

SCALE 5 0 10 1:500

# US 70 AT OLD US 70 (EASTERN INTERSECTION)

DIVISION 12 IREDELL COUNTY E. OF STATESVILLE

| | | | |
|---|---|---|---|
| PLAN DATE: | AUG 2002 | REVIEWED BY: | X FAN |
| PREPARED BY: | K MILAM | REVIEWED BY: | |

| REVISIONS | INIT. | DATE |
|---|---|---|
| | | |

SEAL
NORTH CAROLINA PROFESSIONAL SEAL 21080 ENGINEER TYSON A. GRAVES
SEAL NOT VALID UNLESS SIGNED AND DATED
SIGNATURE 1-27-03 DATE
SIG. INVENTORY NO. 12-1691T

$$$$SYSTIME$$$$
$$$$SYSDATE$$$$
$$$$USERNAME$$$$