NOTES

STIRRUPS MAY BE SHIFTED AS NECESSARY TO CLEAR DOWELS.

THE LATERAL GUIDE AT EACH END OF THE CAP IS NOT TO BE POURED UNTIL AFTER CORED SLAB UNITS ARE IN PLACE.

PIPE DRAINS MAY BE SHIFTED SLIGHTLY AS NECESSARY TO CLEAR REINFORCING STEEL AND DOWELS.

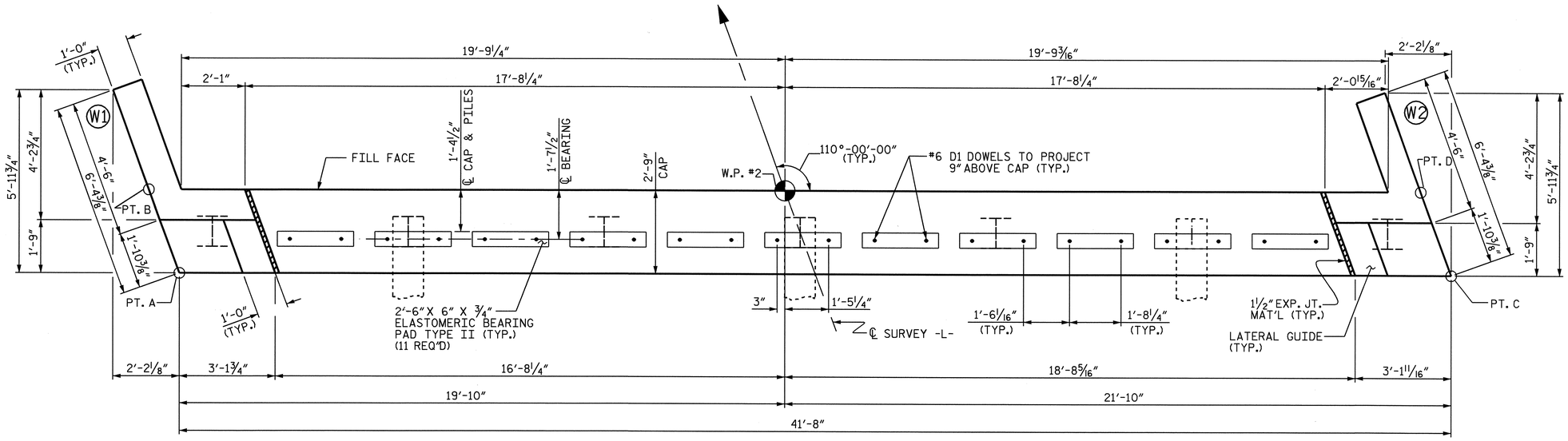

PLAN

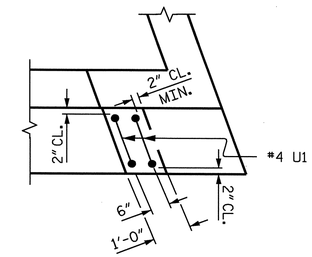

PLAN

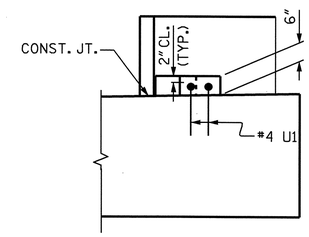

ELEVATION

LATERAL GUIDE DETAILS

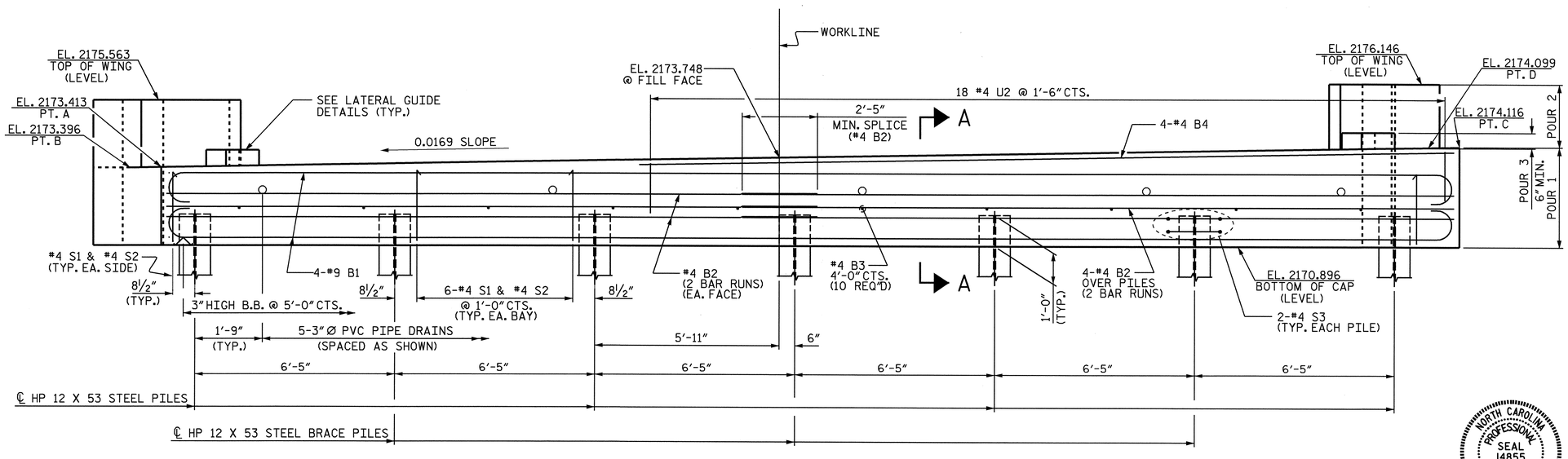

ELEVATION

PROJECT NO. B-3614

BUNCOMBE COUNTY

STATION: 14+24.50 -L-

SHEET 1 OF 3

STATE OF NORTH CAROLINA
DEPARTMENT OF TRANSPORTATION
RALEIGH

SUBSTRUCTURE
END BENT 2

NORTH CAROLINA PROFESSIONAL SEAL 14855 ENGINEER DOUGLAS R. CALLIHAN

3-10-04

REVISIONS						SHEET NO.
NO.	BY:	DATE:	NO.	BY:	DATE:	S-11
1			3			TOTAL SHEETS
2			4			17

DRAWN BY : A. K. PATEL DATE : 7/07/03
CHECKED BY : T. A. HARRIS DATE : 7/24/03

10-MAR-2004 08:08
W:\squadd\b3614\akpatel\Microstation\B3614_SD_E*_01.dgn
TAHarris