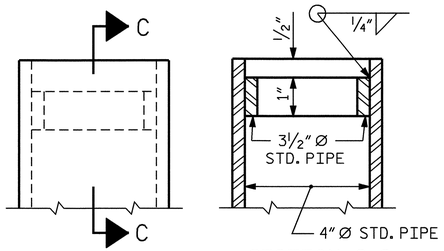

SECTION C-C

DETAIL "A"

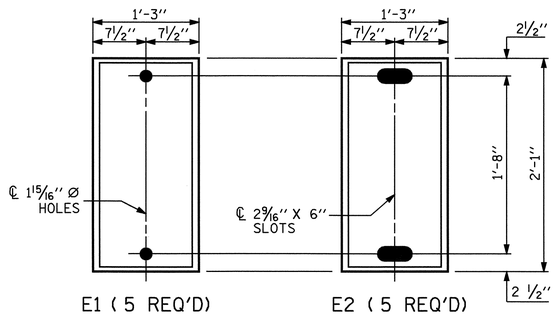

PLAN VIEW OF ELASTOMERIC BEARING

TYPE VI

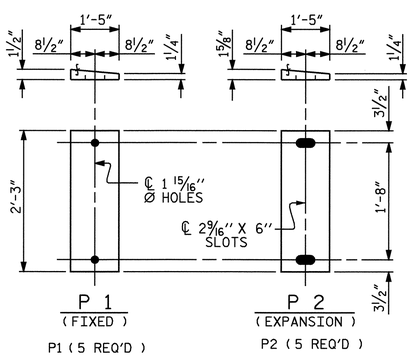

SOLE PLATE DETAILS ("P")

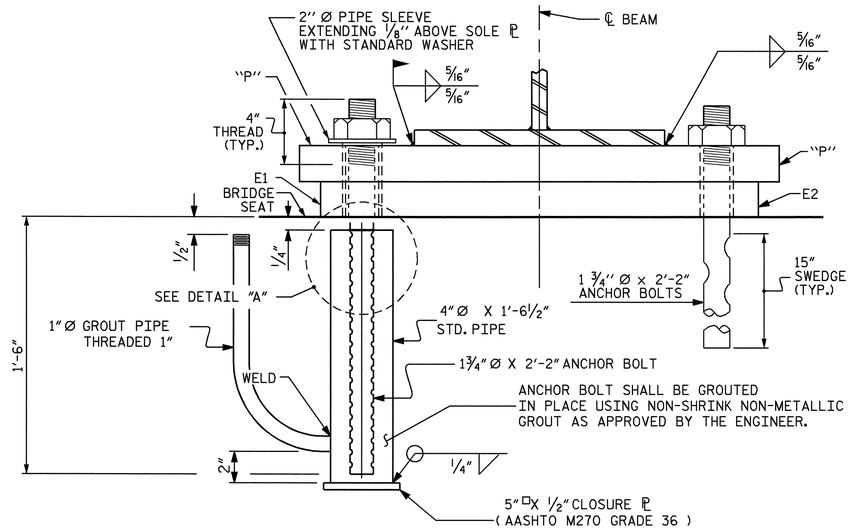

END VIEW

THE CONTRACTOR'S ATTENTION IS CALLED TO THE FOLLOWING PROCEDURES TO ACCOMODATE GIRDER TRANSLATION AND END ROTATION:

1. ONCE THE DECK HAS CURED, THE GIRDERS SHALL BE JACKED AND THE SOLE PLATE AND ELASTOMERIC BEARING SLOTS SHALL BE CENTERED AS NEARLY AS PRACTICAL ABOUT THE BEARING STIFFENER AND ANCHOR BOLTS. THIS OPERATION SHALL BE PERFORMED AT APPROXIMATELY 60° F.
2. AFTER CENTERING THE SLOTS ABOUT THE ANCHOR BOLTS, THE SOLE PLATES SHALL BE FIELD WELDED TO THE GIRDER FLANGES AND ANCHOR BOLTS GROUTED.
3. THE CONTRACTOR MAY PROPOSE ALTERNATE METHODS PROVIDED DETAILS ARE SUBMITTED TO THE ENGINEER FOR REVIEW AND APPROVAL.

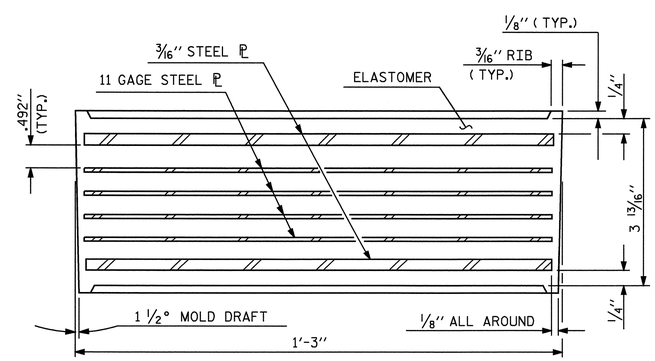

TYPICAL SECTION OF ELASTOMERIC BEARING

NOTES

FOR ELASTOMERIC BEARINGS, SEE SPECIAL PROVISIONS.

AT ALL FIXED POINTS OF SUPPORT, NUTS FOR ANCHOR BOLTS ARE TO BE TIGHTENED FINGER TIGHT AND THEN BACKED OFF 1/2 TURN. THE THREAD OF THE NUT AND BOLT SHALL THEN BE BURRED WITH A SHARP POINTED TOOL.

THE 2" Ø PIPE SLEEVE SHALL BE CUT FROM SCHEDULE 40 PVC PLASTIC PIPE. THE PVC PLASTIC PIPE SHALL MEET THE REQUIREMENTS OF ASTM D1785.

THE PAYMENT FOR THE PIPE SLEEVES SHALL BE INCLUDED IN THE SEVERAL PAY ITEMS.

FOR AASHTO M270 GRADE 50W STRUCTURAL STEEL, SOLE PLATE SHALL BE AASHTO M270 GRADE 50W AND SHALL NOT BE GALVANIZED. ANCHOR BOLTS, NUTS AND WASHERS SHALL BE GALVANIZED IN ACCORDANCE WITH THE STANDARD SPECIFICATIONS.

ANCHOR BOLTS SHALL MEET THE REQUIREMENTS OF ASTM A449. NUTS SHALL MEET THE REQUIREMENTS OF AASHTO M291-DH OR AASHTO M292-2H. WASHERS SHALL MEET THE REQUIREMENTS OF AASHTO M293. SHOP DRAWINGS ARE NOT REQUIRED FOR ANCHOR BOLTS, NUTS AND WASHERS. SHOP INSPECTION IS REQUIRED.

WHEN FIELD WELDING THE SOLE PLATE TO THE GIRDER FLANGE, USE TEMPERATURE INDICATING WAX PENS, OR OTHER SUITABLE MEANS, TO ENSURE THAT THE TEMPERATURE OF THE SOLE PLATE DOES NOT EXCEED 300°F. TEMPERATURES ABOVE THIS MAY DAMAGE THE ELASTOMER.

ALL SURFACES OF BEARING PLATES SHALL BE SMOOTH AND STRAIGHT.

—LOAD RATINGS—	
	MAX.D.L.+ L.L.
TYPE VI	262 K

PROJECT NO. R-2911D
ROWAN COUNTY
STATION: 231+17.87 -L-
14+25.15 -Y8-

STATE OF NORTH CAROLINA
DEPARTMENT OF TRANSPORTATION
RALEIGH

STANDARD

ELASTOMERIC BEARING DETAILS

(STEEL SUPERSTRUCTURE)
(RIGHT LANE)

NORTH CAROLINA PROFESSIONAL SEAL 20224 ENGINEER STEVEN DOUGLAS BACKLEY
10/7/04

REVISIONS						SHEET NO.
NO.	BY:	DATE:	NO.	BY:	DATE:	S-37
1			3			TOTAL SHEETS
2			4			120

ASSEMBLED BY : M.K. BEARD	DATE : 5/17/04	
CHECKED BY : J.P. ADAMS	DATE : 05/24/04	
DRAWN BY : EEM 10/95	REV. 8/16/99	MAB/LES
CHECKED BY : PEK 10/95	REV. 10/17/00	RWW/LES
	REV. 7/10/01	LES/RDR

01-OCT-2004 11:34
W:\squads\R2911D\FINAL_PLANS\STR2\R-2911D_sd_BG_02.dgn
srackley

STR. #2