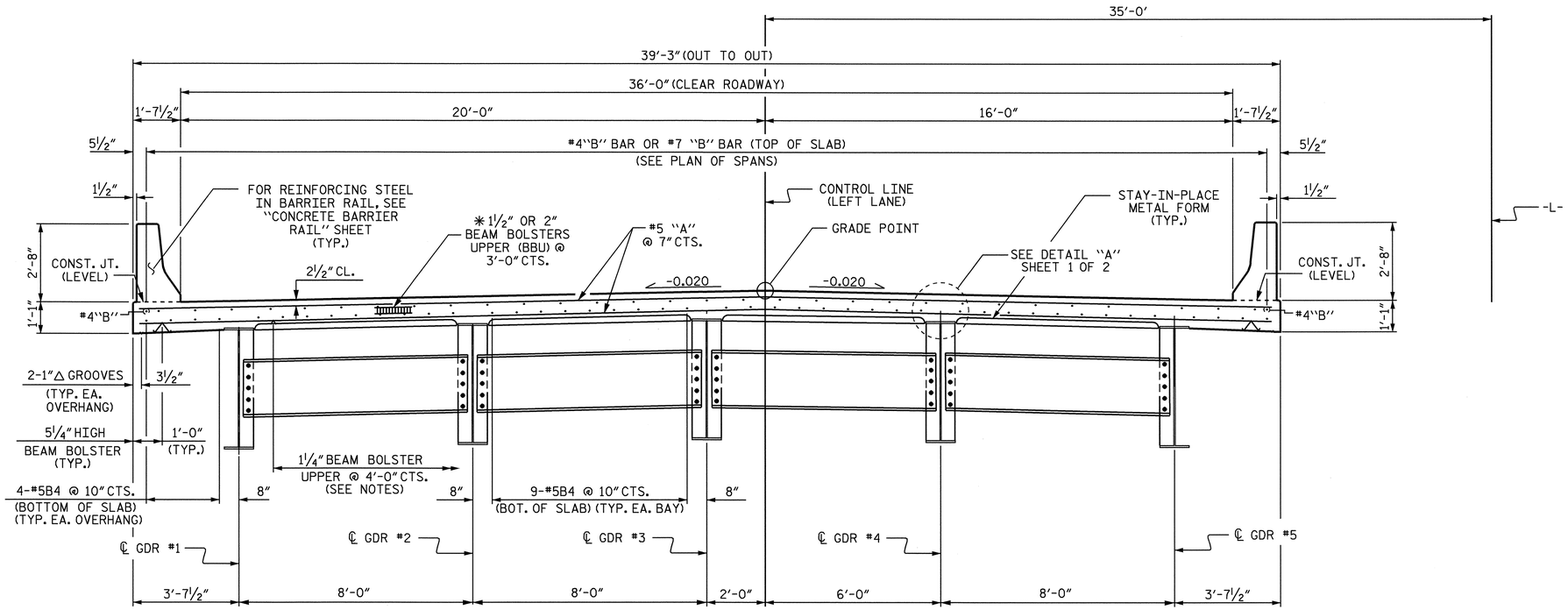

TYPICAL SECTION AT INTERMEDIATE DIAPHRAGM

✱1½" BEAM BOLSTER UPPER (B.B.U.) TO BE USED IN AREAS OF SLAB WITH #7 "B" BARS AT BENT 1 AND BENT 2. ALL OTHER AREAS OF THE SLAB USE 2" BEAM BOLSTER UPPER (B.B.U.).

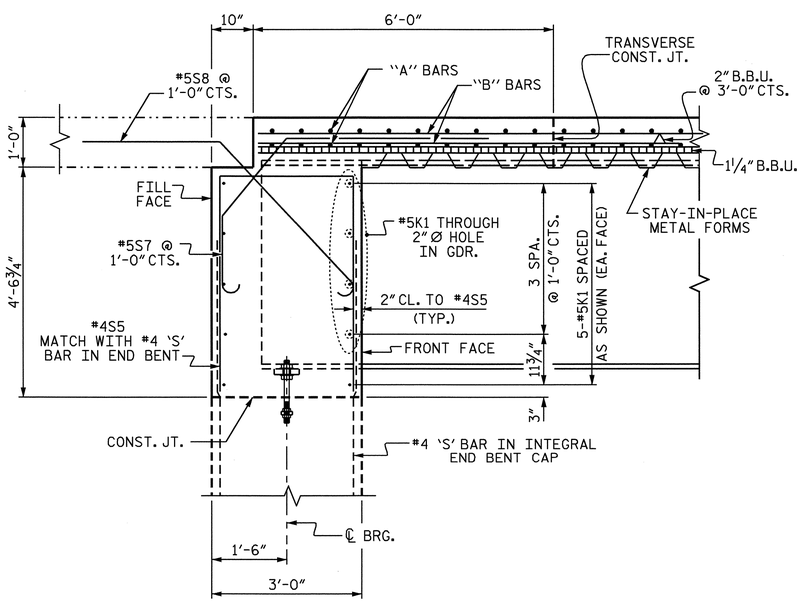

SECTION THRU INTEGRAL END BENT

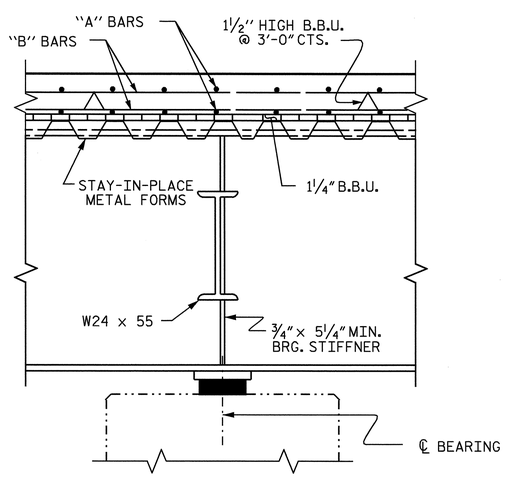

SECTION AT BENT

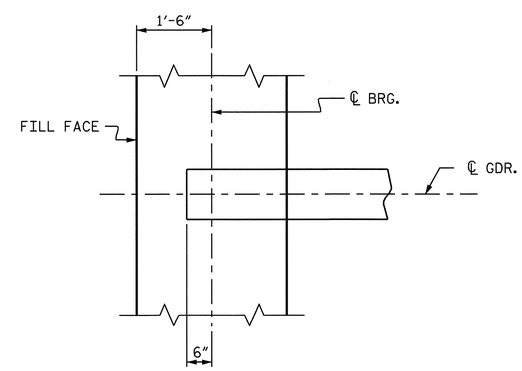

PLAN OF BEAM @ INTEGRAL END BENT #1

END BENT 1 SHOWN, END BENT 2 SIMILIAR

PROJECT NO. R-2911D

ROWAN COUNTY

STATION: 304+22.00-L-

SHEET 2 OF 2

STATE OF NORTH CAROLINA
DEPARTMENT OF TRANSPORTATION
RALEIGH

SUPERSTRUCTURE
TYPICAL SECTION

(LEFT LANE)

NORTH CAROLINA PROFESSIONAL SEAL 20211 ENGINEER THOMAS G. LAYNE

Thomas G. Layne 11/4/04

REVISIONS						SHEET NO.
NO.	BY:	DATE:	NO.	BY:	DATE:	S-59
1			3			TOTAL SHEETS
2			4			120

DRAWN BY : S.H. SOCKWELL DATE : 4/04
CHECKED BY : K.D. LAYNE DATE : 5/04

02-NOV-2004 14:08
wt\squadt\r2911d\final\Str3\R-2911D_sd_TS_03.dgn
klayne

STR. #3