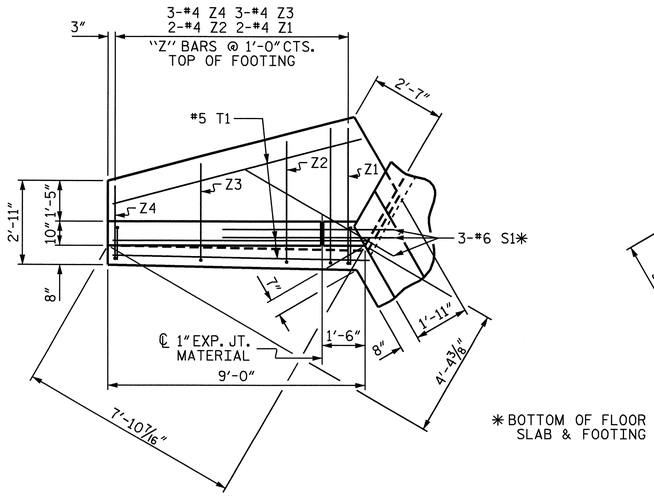

✱ BOTTOM OF FLOOR SLAB & FOOTING

PLAN W2

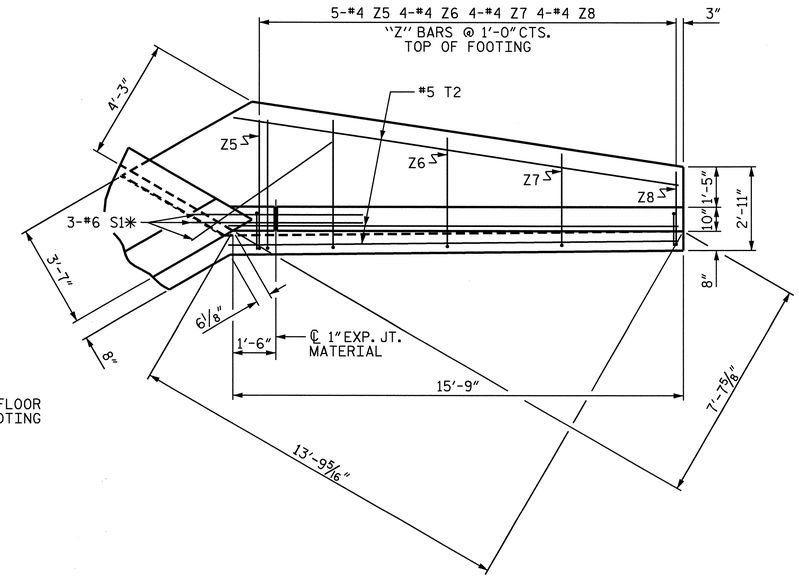

PLAN W1

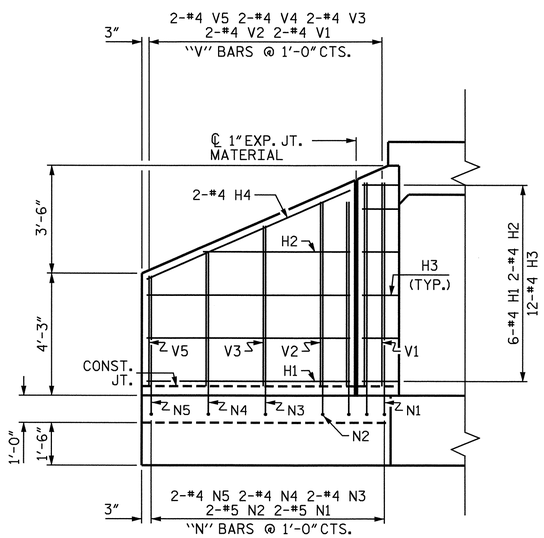

ELEVATION W2

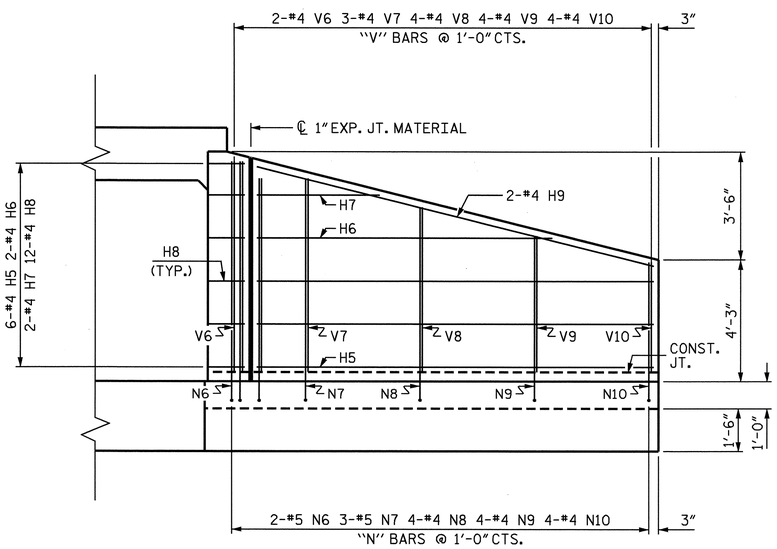

ELEVATION W1

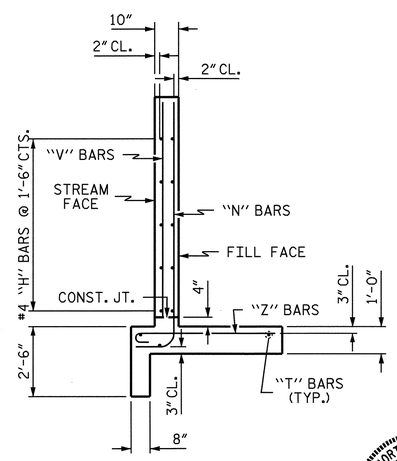

TYPICAL WING SECTION

BAR TYPES

ALL BAR DIMENSIONS ARE OUT TO OUT.

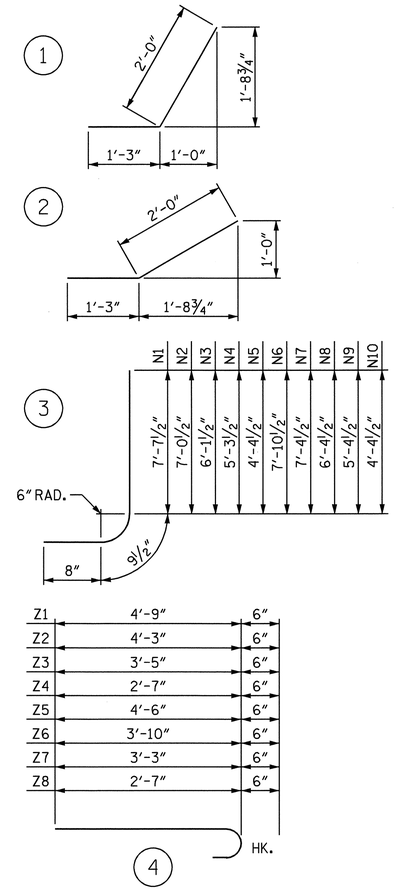

BILL OF MATERIAL

BAR	NO.	SIZE	TYPE	LENGTH	WEIGHT
H1	6	#4	STR	7'-1"	28
H2	2	#4	STR	5'-2"	7
H3	12	#4	1	3'-3"	26
H4	2	#4	STR	7'-9"	10
H5	6	#4	STR	13'-10"	55
H6	2	#4	STR	10'-4"	14
H7	2	#4	STR	4'-3"	6
H8	12	#4	2	3'-3"	26
H9	2	#4	STR	14'-3"	19
N1	2	#5	3	9'-1"	19
N2	2	#5	3	8'-6"	18
N3	2	#4	3	7'-7"	10
N4	2	#4	3	6'-9"	9
N5	2	#4	3	5'-10"	8
N6	2	#5	3	9'-4"	19
N7	3	#5	3	8'-10"	28
N8	4	#4	3	7'-10"	21
N9	4	#4	3	6'-10"	18
N10	4	#4	3	5'-10"	16
S1	6	#6	STR	6'-0"	54
T1	3	#5	STR	9'-0"	28
T2	3	#5	STR	15'-9"	49
V1	2	#4	STR	7'-1"	9
V2	2	#4	STR	6'-5"	9
V3	2	#4	STR	5'-7"	7
V4	2	#4	STR	4'-8"	6
V5	2	#4	STR	3'-10"	5
V6	2	#4	STR	7'-4"	10
V7	3	#4	STR	6'-9"	14
V8	4	#4	STR	5'-9"	15
V9	4	#4	STR	4'-9"	13
V10	4	#4	STR	3'-10"	10
Z1	2	#4	4	5'-3"	7
Z2	2	#4	4	4'-9"	6
Z3	3	#4	4	3'-11"	8
Z4	3	#4	4	3'-1"	6
Z5	5	#4	4	5'-0"	17
Z6	4	#4	4	4'-4"	12
Z7	4	#4	4	3'-9"	10
Z8	4	#4	4	3'-1"	8

REINFORCING STEEL FOR 2 WINGS 660 LBS

CLASS A CONCRETE
STAGE 1
1 WING 3.3 CY
PARTIAL END CURTAIN WALL 0.4 CY
TOTAL 3.7 CY

STAGE 2
1 WING 6.6 CY
1 HEADWALL 0.6 CY
PARTIAL END CURTAIN WALL 0.3 CY
TOTAL 7.5 CY

PROJECT NO. R-2911D
ROWAN COUNTY
STATION: 254+51.60 -L-

SHEET 4 OF 5

STATE OF NORTH CAROLINA
DEPARTMENT OF TRANSPORTATION
RALEIGH

WINGS FOR RCBC RIGHT EXTENSION H= 7'-0" SLOPE= 2:1 58° SKEW

NORTH CAROLINA PROFESSIONAL SEAL 20211 ENGINEER THOMAS G. PAYNE
11/2/04

REVISIONS						SHEET NO.
NO.	BY:	DATE:	NO.	BY:	DATE:	C - 4
1			3			TOTAL SHEETS
2			4			13

ASSEMBLED BY : A. CHAN DATE : 2/16/04
CHECKED BY : S.H. SOCKWELL DATE : 7/13/04
DRAWN BY : CCJ 11/99
CHECKED BY : RWW 03/00

STD. NO. CW6007

STR #5