NOTES

STIRRUPS IN CAP MAY BE SHIFTED AS NECESSARY TO CLEAR ANCHOR BOLTS.

FOR PILE SPLICE DETAILS, SEE SHEET 2 OF 2.

THE LATERAL GUIDE AT EACH END IS NOT TO BE POURED UNTIL AFTER THE CORED SLAB UNITS ARE IN PLACE.

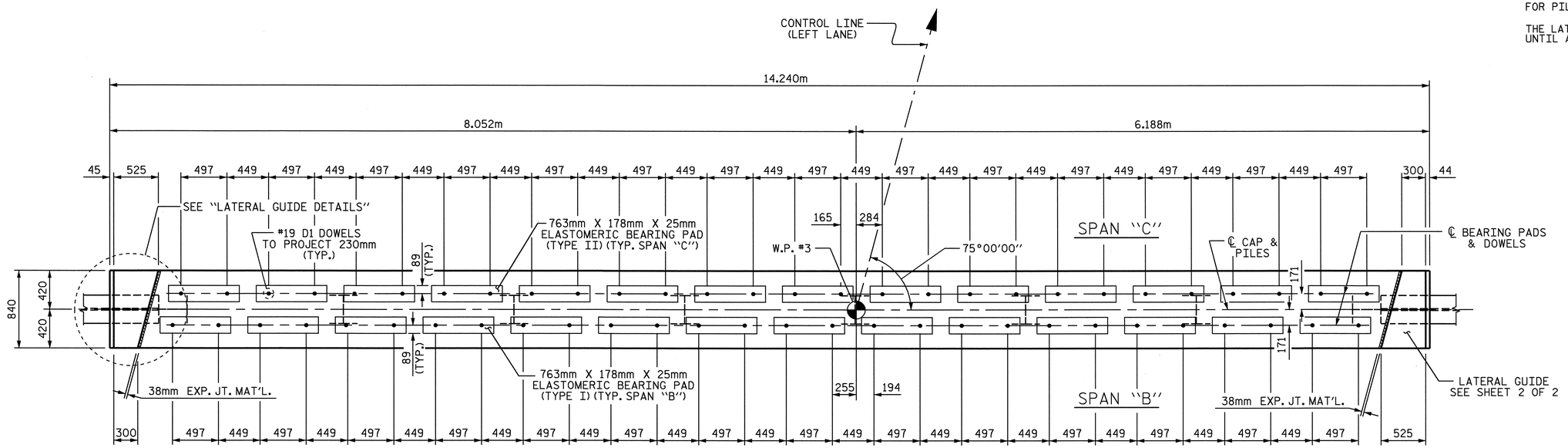

PLAN

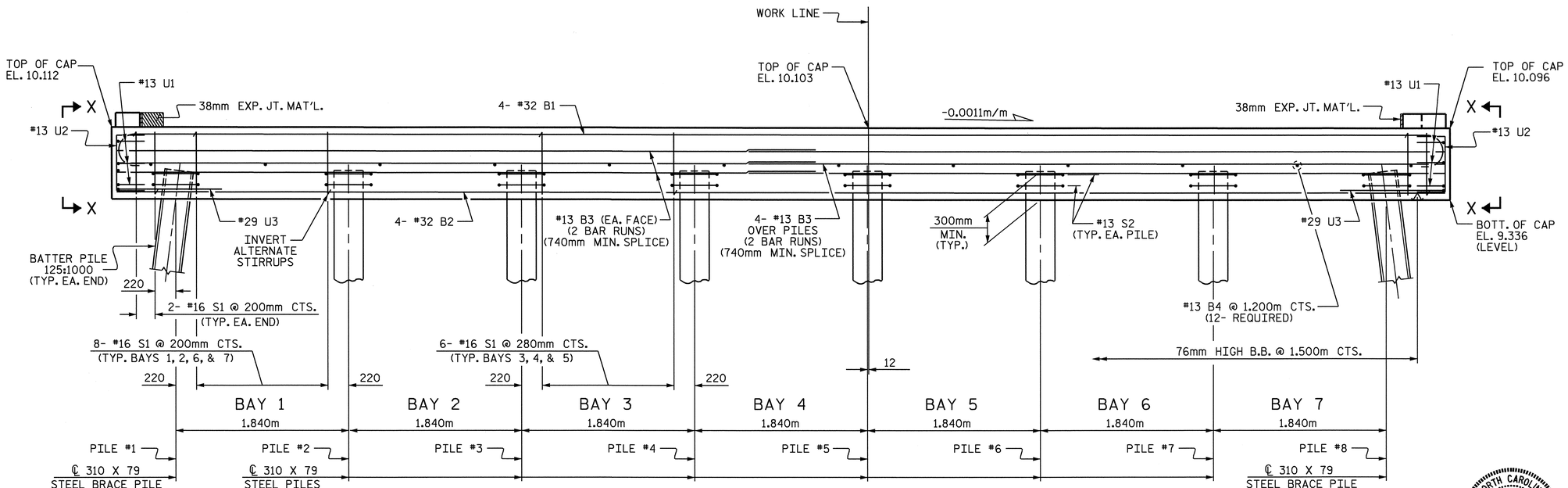

ELEVATION

NOTE: ℄ PILE IS 12mm LEFT OF WORK LINE.

PROJECT NO. R-2514A

ONSLOW COUNTY

STATION: 182+87.400-L-MED

SHEET 1 OF 2

STATE OF NORTH CAROLINA
DEPARTMENT OF TRANSPORTATION
RALEIGH

SUBSTRUCTURE BENT #2 LEFT LANE

NORTH CAROLINA PROFESSIONAL SEAL 15825 ENGINEER D. KLAPPENBACH BRIDGE
4-7-04

REVISIONS						SHEET NO.
NO.	BY:	DATE:	NO.	BY:	DATE:	S-14
1			3			TOTAL SHEETS
2			4			46

DRAWN BY : D. A. GLADDEN DATE : 10-31-03
CHECKED BY : G.M. Patterson DATE : 12-09-03

07-APR-2004 12:32
W:\squadl\R2514a\Strland2\dgladden\Microstation\xR2514A_sd_B2_01.dgn
dgladden