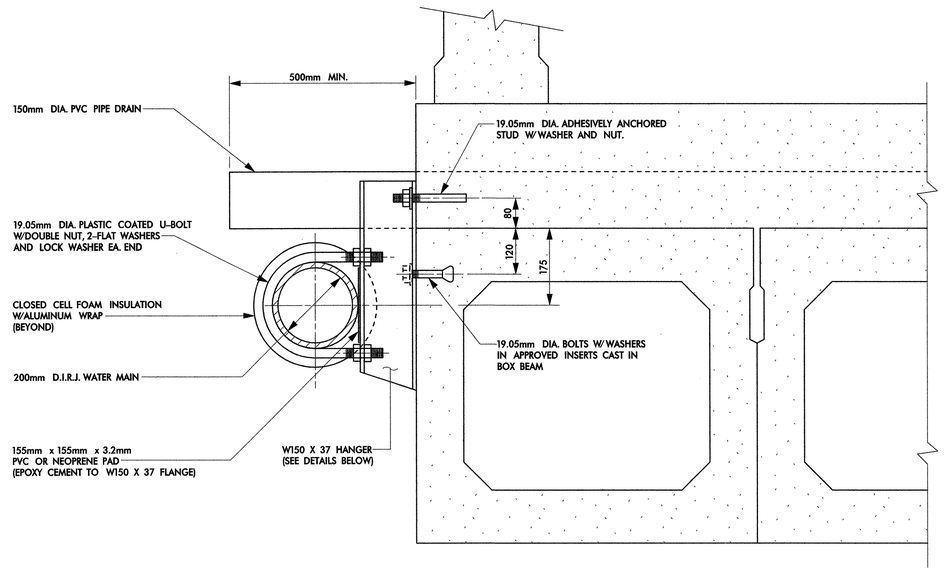

HANGER ASSEMBLY DETAIL

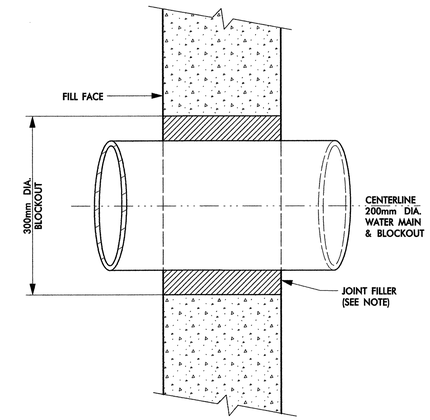

SECTION THRU BACK WALL

NOTE:

CENTER UTILITY IN BLOCKOUT AND FILL ANNULAR SPACE AROUND UTILITY PIPE WITH JOINT FILLER IN ACCORDANCE WITH STANDARD SPECIFICATIONS ARTICLE 1028-1.

BILL OF MATERIAL FOR 200mm WATER MAIN		
NO.	UNITS	ITEMS
1	102 EA	19.05mm APPROVED ADHESIVELY ANCHORED STUDS
2	204.9M	200mm D.I. RESTRAINED JOINT WATER PIPE PC 2.41MPa
3	2 EA	200mm 45° D.I.R.J. BENDS
4	2 EA	END PLUGS (OR CAPS) FOR 200mm D.I. PIPE
5	102 EA	HANGER ASSEMBLIES
6	1 LOT	PIPE INSULATION (AS REQUIRED)
7	1 LOT	PAINT (AS REQUIRED)

THESE QUANTITIES ARE FOR ESTIMATED QUANTITIES ONLY

NOTE:
THE COST OF INSERTS IN BOX BEAMS TO BE INCLUDED IN UNIT PRICE BID FOR PRESTRESSED CONCRETE BOX BEAMS.

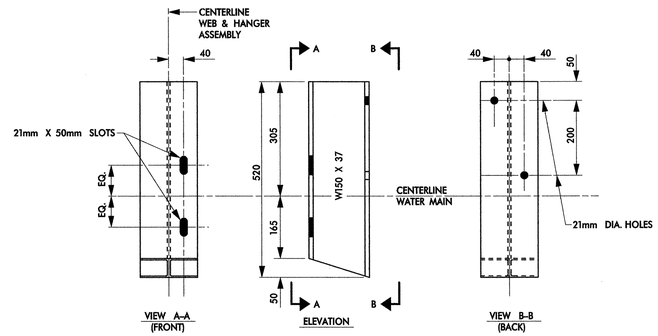

W150 X 37 HANGER DETAILS

THE STEEL HANGER AND ASSOCIATED HARDWARE, ALUMINUM WRAP ON THE D. I. R. J. WATER MAIN, AND PVC DECK DRAINPIPE SHALL BE PAINTED TO MEET THE REQUIREMENTS OF ARTICLE 1080-12 OF THE STANDARD SPECIFICATIONS WITH THE FOLLOWING EXCEPTIONS. THE STEEL HANGERS AND HARDWARE SHALL BE PAINTED WITH 2 PRIMER COATS, A FINISH COAT AND AN APPEARANCE COAT THAT MEETS THE REQUIREMENTS OF SYSTEM 3 EXCEPT THAT THE COLOR OF THE FINAL COAT SHALL MATCH THE FEDERAL STANDARD 595B NO. 26622 (COLOR TO BE APPROVED BY THE ENGINEER).

PROJECT NO. B-2583
MADISON COUNTY
STATION: 12+21.750 -L-

STATE OF NORTH CAROLINA
DEPARTMENT OF TRANSPORTATION
RALEIGH

UTILITY ATTACHMENTS
DETAIL SHEET
(200mm WATER LINE)

PLANS PREPARED BY:
MULKEY ENGINEERS & CONSULTANTS
PO Box 33127
Raleigh, N.C. 27636
(919) 851-1912
(919) 851-1918 (FAX)
WWW.MULKEYINC.COM

NORTH CAROLINA PROFESSIONAL SEAL 14114 ENGINEER ROBERT C. LARSON
10/14/09

REVISIONS							SHEET NO.
NO.	BY:	DATE:	NO.	BY:	DATE:		S-53
1			3				TOTAL SHEETS
2			4				112

REFERENCE NO.

DRAWN BY : GS DATE : 10-14-02
CHECKED BY : RCL DATE : 10-14-02