PROJECT REFERENCE NO.	SHEET NO.
U-3328	SIG. 6

3 Phase
Fully Actuated
w/ EV Preemption
(Rocky Mount Closed Loop System)

PHASING DIAGRAM

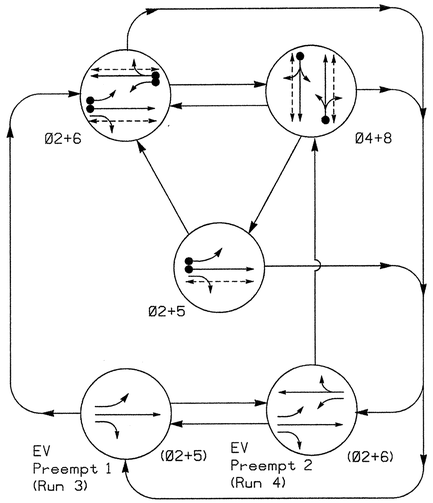

PHASING DIAGRAM DETECTION LEGEND

- DETECTED MOVEMENT
- UNDETECTED MOVEMENT (OVERLAP)
- UNSIGNALIZED MOVEMENT
- PEDESTRIAN MOVEMENT

TABLE OF OPERATION

SIGNAL FACE	PHASE Ø2+5	Ø2+6	Ø4+8	EVP1	EVP2	FLASH
21	G	G	R	G	G	Y
22	G	G	R	G	G	Y
41,42	R	R	G	R	R	R
61,62	R	G	R	R	G	Y
81,82	R	R	G	R	R	R
P21,P22	W	W	DW	DW	DW	DRK
P41,P42	DW	DW	W	DW	DW	DRK
P61,P62	DW	W	DW	DW	DW	DRK
P81,P82	DW	DW	W	DW	DW	DRK

SIGNAL FACE I.D.

Denotes L.E.D.

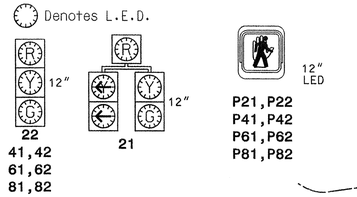

EMERGENCY VEHICLE PRE EMPTION TIMING CHART

	PRE EMPT 1	PRE EMPT 2
DELAY BEFORE PRE EMPT	0 SEC	0 SEC
PED CLR BEFORE PRE EMPT	15 SEC	15 SEC
MIN GREEN BEFORE PRE EMPT	▲ SEC	▲ SEC
YEL CLR BEFORE PRE EMPT	▲ SEC	▲ SEC
RED CLR BEFORE PRE EMPT	▲ SEC	▲ SEC
PREEMPT DWELL MIN GREEN	5.0 SEC	5.0 SEC
YEL CLR AFTER EV PRE EMPT	4.0 SEC	4.0 SEC
RED CLR AFTER EV PRE EMPT	1.0 SEC	2.0 SEC

▲ SEE NOTE 10

PLAN QUANTITIES

Pay Item	Feet
Signal Cable	1690
Messenger Cable	360
Lead-in Cable	1580

NOTES

1. Refer to "Roadway Standard Drawings NCDOT" dated January 2002 and "Standard Specifications for Roads and Structures" dated January 2002.
2. Relocate existing signs A (Raleigh St) and signs B (Stokes Ave).
3. Omit phase 5 during phase 6 on.
4. Wire cabinet to allow the controller to clear from phase 2+6 to phase 2+5 by progressing through phase 4+8.
5. Maximum times shown in timing chart are for free-run operation only. Coordinated signal system timing values shall supersede these values.
6. Program phase 4 and 8 for dual entry.
7. Set all detector units to presence mode.
8. Relocate Opticom detector units.
9. Closed Loop System Data: Intersection Address #702
10. Preemption timing to enter the preempt phase sequence only after satisfying minimum green time and clearance interval requirements of the active phase sequence.
11. To ensure heads 21 and 22 clear to all-red when transitioning to EVP 1, a fixed all-red interval of 5 seconds will be used to initiate the preempt sequence.

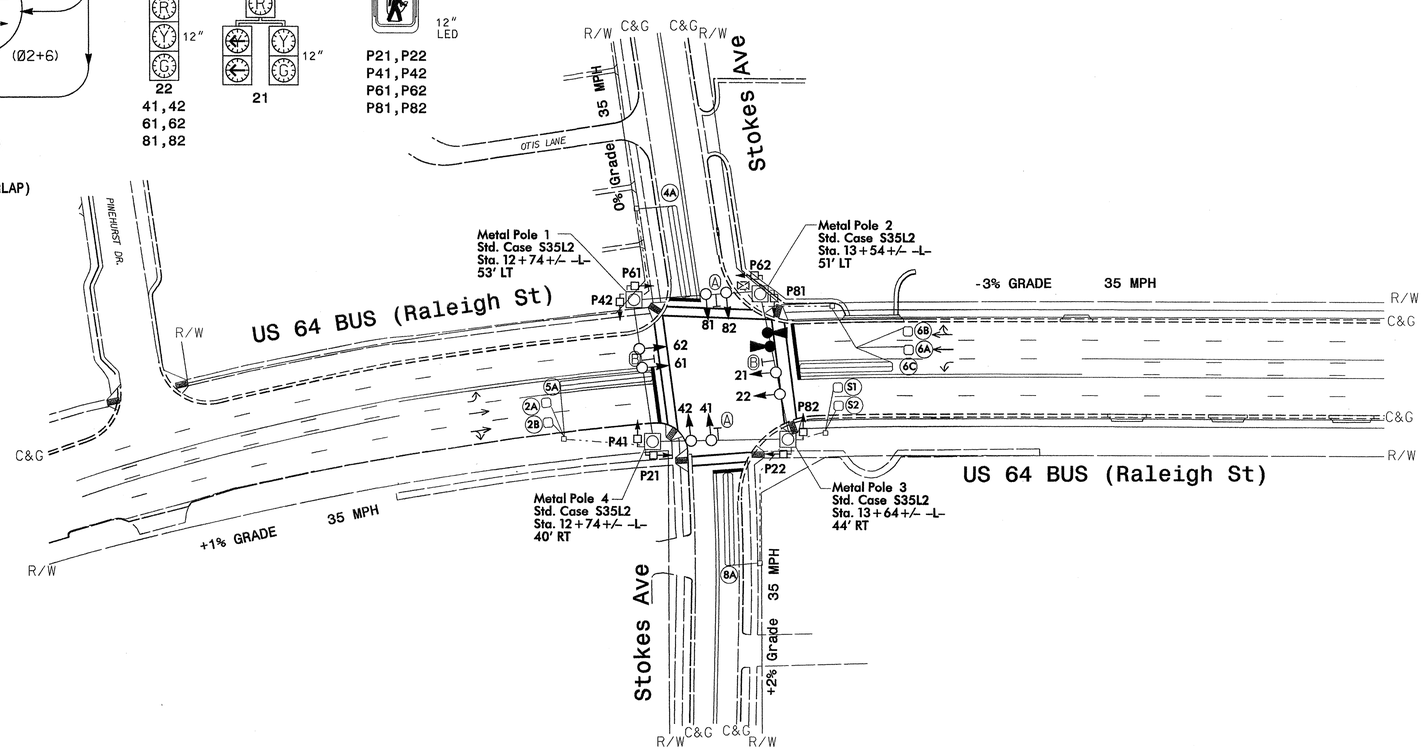

LEGEND

PROPOSED		EXISTING
	Traffic Signal Head	
	Modified Signal Head	N/A
	Sign	
	Pedestrian Signal Head With Push Button & Sign	
	Signal Pole with Guy	
	Signal Pole with Sidewalk Guy	
	Inductive Loop Detector	
	Controller & Cabinet	
	Junction Box	
	2-in Underground Conduit	
N/A	Right of Way with Marker	
	Directional Arrow	
	Pavement Marking Arrow	
	Metal Strain Pole	
	Opticom Detector	
	"Raleigh St" Sign	
	"Stokes Ave" Sign	

TIMING CHART
NEMA CONTROLLER

PHASE	Ø2	Ø4	Ø5	Ø6	Ø8
MINIMUM GREEN	10 SEC.	7 SEC.	7 SEC.	10 SEC.	7 SEC.
PASSAGE/GAP	3 SEC.	1 SEC.	1 SEC.	3 SEC.	1 SEC.
YELLOW CHANGE INT.	4.0 SEC.	4.0 SEC.	4.0 SEC.	4.0 SEC.	4.0 SEC.
RED CLEARANCE	2.0 SEC.	2.0 SEC.	1.0 SEC.	2.0 SEC.	2.0 SEC.
MAX. 1	45 SEC.	25 SEC.	20 SEC.	45 SEC.	25 SEC.
RECALL POSITION	MIN. RECALL	NONE	NONE	MIN. RECALL	NONE
VEHI. CALL MEMORY	LOCK	NON LOCK	NON LOCK	LOCK	NON LOCK
WALK	7 SEC.	7 SEC.	– SEC.	7 SEC.	7 SEC.
FLASHING DON'T WALK	7 SEC.	13 SEC.	– SEC.	14 SEC.	15 SEC.
VOLUME DENSITY	OFF	OFF	OFF	OFF	OFF

LOOP & DETECTOR UNIT INSTALLATION CHART
NEMA CONTROLLER WITH TS-1 CABINET

INDUCTIVE LOOPS						DETECTOR UNITS									
LOOP NO.	SIZE (ft)	TURNS	DIST. FROM STOPBAR (ft)	NEW	EXISTING	UNIT NO.	NEW	EXISTING	CHANNEL	NEMA PHASE	TIMING FEATURE	TIMING TIME	PLACE CALL DURING PHASE	INHIBIT DELAY DURING GREEN†
2A,2B	6X6	4	70	X		1		X	1	2	–	– SEC.	ALL	NO
4A	6X60	2-4-2	0	X		2		X	1	4	DELAY	5 SEC.	ALL	YES
5A	6X60	2-4-2	0	X		3		X	1	2	DELAY	3 SEC.	ALL	NO
									2	5	DELAY	15 SEC.	ALL	YES
6A,6B	6X6	3	70	X		1		X	2	6	–	– SEC.	ALL	NO
6C	6X60	2-4-2	0	X		4		X	1	6	DELAY	3 SEC.	ALL	NO
8A	6X60	2-4-2	0	X		2		X	2	8	DELAY	5 SEC.	ALL	YES
S1	6X6	4	+115	X		5	X		1	SYSTEM	–	– SEC.	–	–
S2	6X6	4	+115	X		5	X		2	SYSTEM	–	– SEC.	–	–

SIGNAL UPGRADE FINAL DESIGN

SEPI ENGINEERING GROUP
2300 Rexwoods Drive
Suite 370
Raleigh, NC 27607
Tel:919-789-9977 Fax:789-9591

Prepared for the Offices of:
Traffic Engineering and Safety Systems Branch
STATE OF NORTH CAROLINA DEPARTMENT OF TRANSPORTATION
Signals and Geometrics Section
122 N. McDowell St., Raleigh, NC 27603

SCALE 0 50 1"=50'

US 64 BUS (RALEIGH ST)
AT
STOKES AVE

DIVISION 04 EDGECOMBE COUNTY ROCKY MOUNT

PLAN DATE:	Aug 2004	REVIEWED BY:	L Eddins
PREPARED BY:	C Kincaid	REVIEWED BY:	S Asefnia

REVISIONS	INIT.	DATE

SEAL
NORTH CAROLINA PROFESSIONAL SEAL 20104 ENGINEER SEBOUH S. ASEFNIA

8/16/04
SIGNATURE DATE

SIG. INVENTORY NO. 04-0382

$$$$SYSTIME$$$$
$$$$USERID$$$$
$$$$FORMS$$$$
$$$$FRAME$$$$