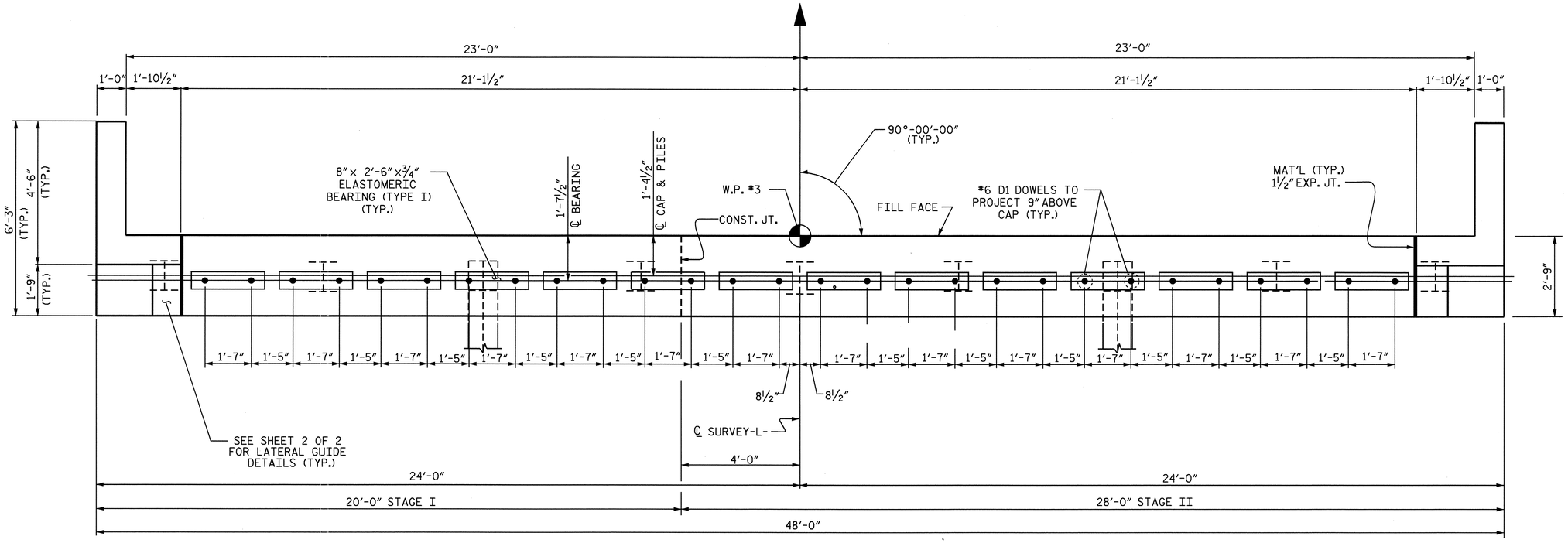

PLAN

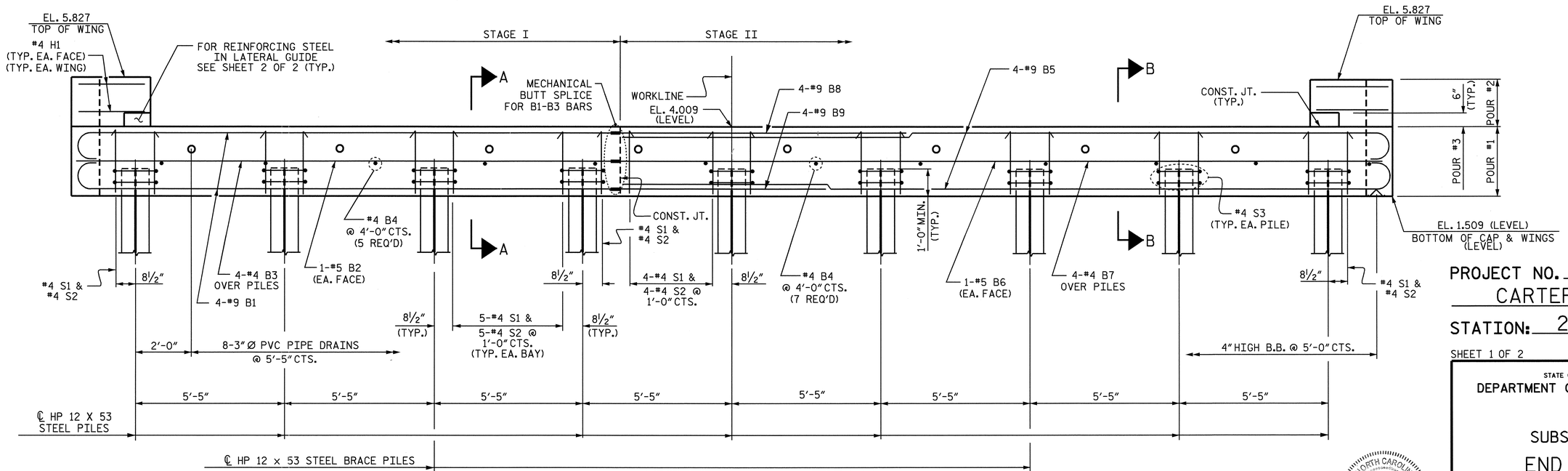

ELEVATION

NOTES

PIPE DRAINS MAY BE SHIFTED SLIGHTLY AS NECESSARY TO CLEAR REINFORCING STEEL AND DOWELS.

STIRRUPS IN CAP MAY BE SHIFTED AS NECESSARY TO CLEAR DOWELS.

THE LATERAL GUIDE AT EACH END OF THE CAP IS NOT TO BE POURED UNTIL AFTER THE CORED SLAB UNITS ARE IN PLACE. SEE LATERAL GUIDE DETAILS, SHEET 2 OF 2.

THE CONTRACTOR SHALL PROVIDE FOR INSTALLATION OF THE 4" Ø DRAIN PIPE THROUGH THE WING WALL AS REQUIRED FOR REINFORCED BRIDGE APPROACH FILLS, SEE THE RAODWAY PLANS. REINFORCING STEEL IN THE WING WALL MAY BE SHIFTED AS NECESSARY TO CLEAR THE DRAIN PIPE.

FOR PIPE DRAIN DETAILS, SEE END BENT 1 SHEET 2 OF 2.

MECHANICAL BUTT SPLICES SHALL NOT EXTEND BEYOND STAGE I CONSTRUCTION AND SHALL BE EPOXY COATED. FOR MECHANICAL BUTT SPLICING FOR REINFORCING STEEL, SEE SPECIAL PROVISIONS.

PROJECT NO. B-3626

CARTERET COUNTY

STATION: 20+29.50-L-

SHEET 1 OF 2

STATE OF NORTH CAROLINA
DEPARTMENT OF TRANSPORTATION
RALEIGH

SUBSTRUCTURE
END BENT 2

NORTH CAROLINA PROFESSIONAL SEAL 21638 ENGINEER LAURA E. SUTTON
1/14/04

REVISIONS						SHEET NO.
NO.	BY:	DATE:	NO.	BY:	DATE:	S-17
1			3			TOTAL SHEETS
2			4			23

DRAWN BY : J.H. MILLER DATE : 4/23/03
CHECKED BY : S.H. SOCKWELL DATE : 6/19/03

13-JAN-2004 14:05
W:\Squad\b3626\jmiller\B3626_sd_E*_01.dgn
lsutton