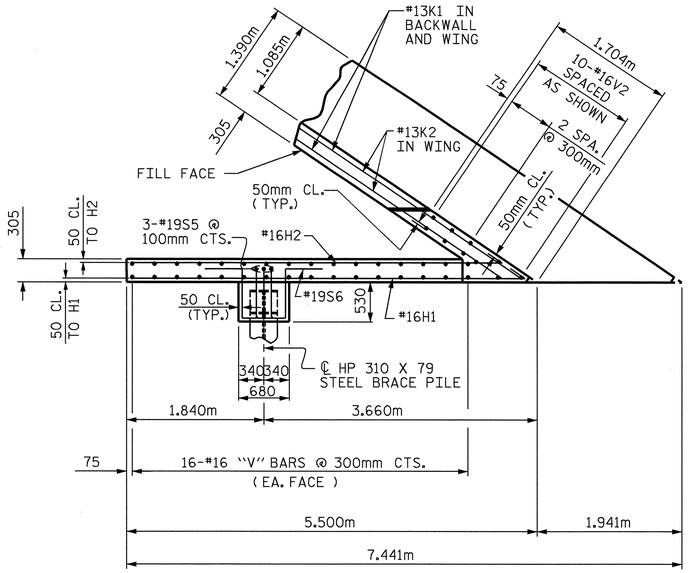

PLAN OF LEFT WING - W1

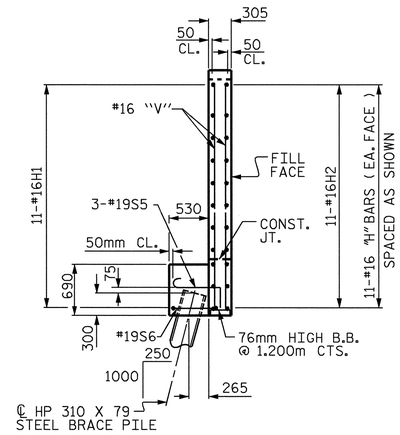

SECTION C-C

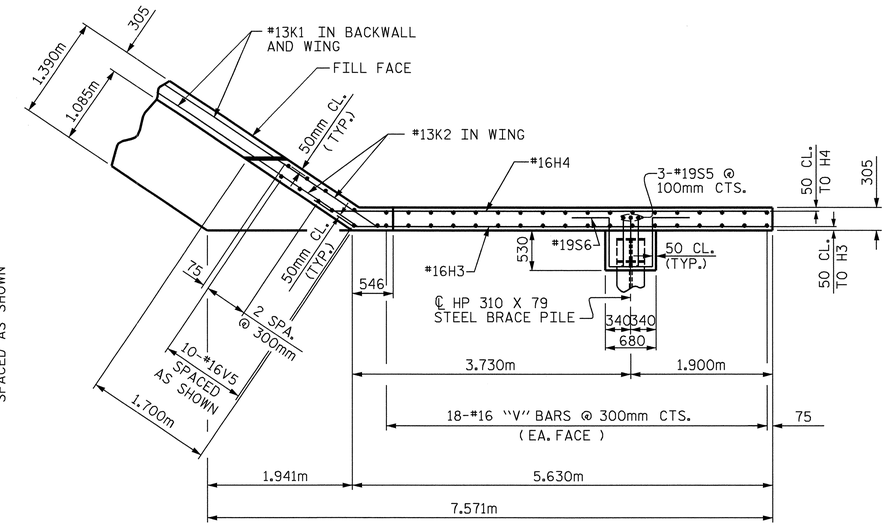

PLAN OF RIGHT WING - W2

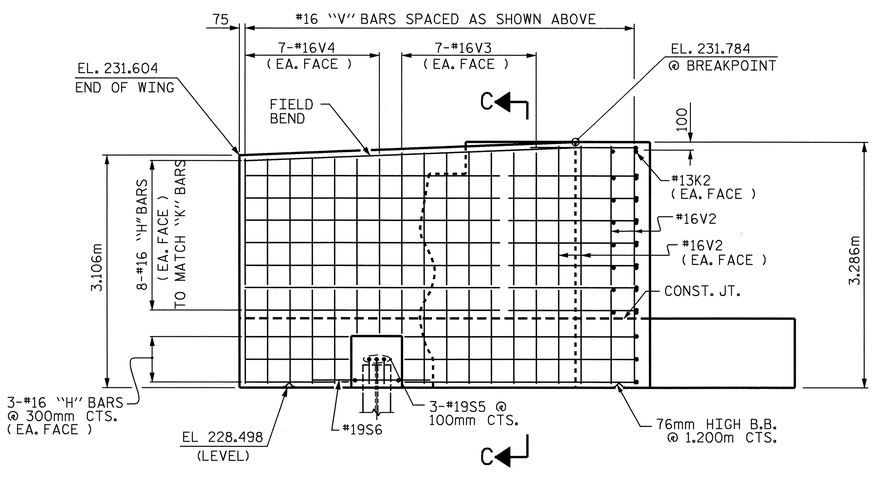

ELEVATION OF LEFT WING - W1

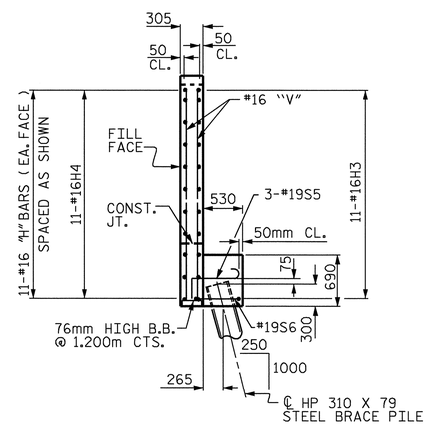

SECTION D-D

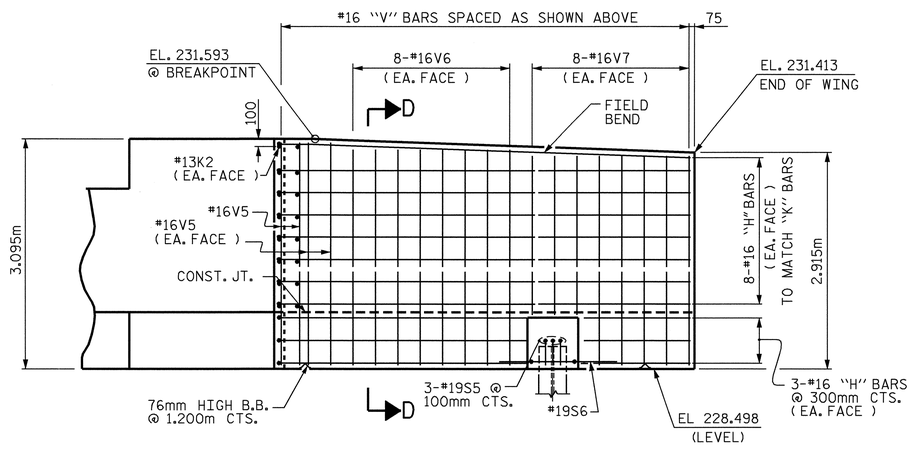

ELEVATION OF RIGHT WING - W2

NOTES

STIRRUPS IN CAP MAY BE SHIFTED AS NECESSARY TO CLEAR ANCHOR BOLTS.

FOR EPOXY PROTECTIVE COATING, SEE SPECIAL PROVISIONS.

BACKWALL SHALL BE PLACED BEFORE APPLYING THE EPOXY PROTECTIVE COATING.

THE TOP SURFACE AREAS OF THE END BENT CAPS SHALL BE CURED IN ACCORDANCE WITH THE STANDARD SPECIFICATIONS EXCEPT THAT THE MEMBRANE CURING COMPOUND METHOD SHALL NOT BE USED.

THE TOP SURFACE OF THE CAP EXCEPT THE BRIDGE SEAT BUILDUPS SHALL BE SLOPED TRANSVERSELY FROM THE FILL FACE TO THE BACK FACE AT THE RATE OF 2%.

EPOXY COAT THE END BENT CAP AFTER ADJUSTMENTS ARE MADE TO BEARINGS AND ANCHOR BOLTS ARE GROUTED.

PROJECT NO. R-2206B
LINCOLN COUNTY
STATION: 123+38.105 -L-

SHEET 2 OF 3

STATE OF NORTH CAROLINA
DEPARTMENT OF TRANSPORTATION
RALEIGH

SUBSTRUCTURE
END BENT 2
(LEFT LANE)

NORTH CAROLINA PROFESSIONAL SEAL 20211 ENGINEER THOMAS G. PAYNE
Thomas G. Payne 8/24/04

REVISIONS						SHEET NO.
NO.	BY:	DATE:	NO.	BY:	DATE:	S-37
1			3			TOTAL SHEETS
2			4			86

DRAWN BY : E. G. ALLEN DATE : 3-8-01
CHECKED BY : H. A. LOCKLEAR DATE : 3-23-01

20-AUG-2004 15:52
W:\squadt\r2206b\FinalPlans\str1\r2206b01eb2.dgn
klayne

STR. #1