NOTES

THE COST OF THE BARRIER RAIL ON THE APPROACH SLAB SHALL BE INCLUDED IN THE LUMP SUM CONTRACT PRICE BID FOR BRIDGE APPROACH SLABS

APPROACH SLAB SHALL NOT BE CONSTRUCTED PRIOR TO COMPLETION OF THE BRIDGE DECK.

FOR REINFORCED BRIDGE APPROACH FILL INCLUDING FABRIC, IMPERMEABLE GEOMEMBRANE, 102mm Ø DRAINAGE PIPE, #78M STONE, AND SELECT MATERIAL, SEE ROADWAY PLANS.

TEMPORARY DRAINAGE AND TEMPORARY BERM AND SLOPE DRAINS WILL BE PAID FOR UNDER THE LUMP SUM PRICE FOR BRIDGE APPROACH SLAB.

AREA BETWEEN THE WINGWALL AND APPROACH SLAB SHALL BE GRADED TO DRAIN THE WATER AWAY FROM THE FILL FACE OF THE BRIDGE AND SHALL BE PAVED. SEE ROADWAY PLANS.

THE 150mm COMP. A.B.C. SHALL EXTEND 3m BEYOND THE END OF THE APPROACH SLAB AND 300mm OUTSIDE OF EACH EDGE OF SLAB.

THE CONTRACTOR MAY USE 100mm TYPE HB ASPHALT CONCRETE BASE COURSE IN LIEU OF 150mm COMP. A.B.C. IF THIS OPTION IS USED, THE BASE COURSE SHALL EXTEND 300mm BEYOND THE END OF THE APPROACH SLAB AND THE WIDTH SHALL BE THE SAME AS THAT OF THE APPROACH SLAB.

THE CONTRACTOR MAY USE 125mm CLASS 'A' CONCRETE BASE IN LIEU OF 150mm COMP. A.B.C. IF THIS OPTION IS USED, THE CONCRETE BASE SHALL EXTEND 300mm BEYOND THE END OF THE APPROACH SLAB AND THE WIDTH SHALL BE THE SAME AS THAT OF THE APPROACH SLAB. THE CONCRETE SHALL BE FINISHED TO A SMOOTH SURFACE AND A LAYER OF 13.6 kg. ROOFING FELT SHALL BE PLACED BETWEEN THE CONCRETE BASE AND THE APPROACH SLAB TO PREVENT BOND. THE APPROACH SLAB SHALL NOT BE CAST UNTIL THE CONCRETE BASE HAS REACHED AN AGE OF THREE CURING DAYS.

THE JOINT SHALL BE SAWED PRIOR TO THE CASTING OF THE BARRIER RAIL.

APPROACH SLAB GROOVING SHALL BE PAID FOR UNDER THE GROOVING BRIDGE FLOORS PAY ITEM.

FOR EVAZOTE JOINT SEALS, SEE SPECIAL PROVISIONS.

THE NOMINAL UNCOMPRESSED SEAL WIDTH OF THE EVAZOTE JOINT SEAL SHALL BE 71mm.

THE ELASTOMERIC CONCRETE SHALL BE INCLUDED IN THE PAY ITEM FOR "EVAZOTE JOINT SEALS", SEE SPECIAL PROVISION FOR ELASTOMERIC CONCRETE.

BAR TYPES

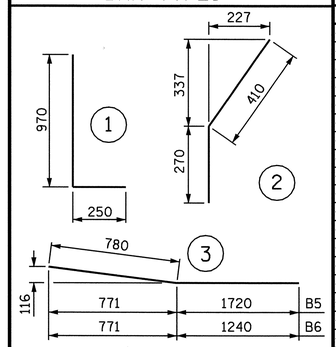

ALL BAR DIMENSIONS ARE OUT TO OUT

BILL OF MATERIAL FOR ONE APPROACH SLAB (2 REQUIRED)

BAR	NO.	SIZE	TYPE	LENGTH	WEIGHT
✳ A1	4	#16	STR.	12220	76
✳ A101	2	#16	STR.	11400	35
✳ A102	2	#16	STR.	10880	34
✳ A103	2	#16	STR.	10360	32
✳ A104	2	#16	STR.	9840	31
✳ A105	2	#16	STR.	9320	29
✳ A106	2	#16	STR.	8800	27
✳ A107	2	#16	STR.	8280	26
✳ A108	2	#16	STR.	7760	24
✳ A109	2	#16	STR.	7240	22
✳ A110	2	#16	STR.	6740	21
✳ A111	2	#16	STR.	6140	19
✳ A112	2	#16	STR.	5620	17
✳ A113	2	#16	STR.	5100	16
✳ A114	2	#16	STR.	4580	14
✳ A115	2	#16	STR.	4080	13
✳ A116	2	#16	STR.	3560	11
✳ A117	2	#16	STR.	3040	9
✳ A118	2	#16	STR.	2520	8
✳ A119	2	#16	STR.	2000	6
✳ A120	2	#16	STR.	1480	5
✳ A121	2	#16	STR.	960	3
✳ A125	4	#16	STR.	11840	74
✳ A126	4	#16	STR.	11440	71
✳ A127	4	#16	STR.	11040	69
✳ A128	4	#16	STR.	10620	66
✳ A129	4	#16	STR.	10220	63
✳ A130	4	#16	STR.	9820	61
✳ A131	4	#16	STR.	9420	58
✳ A132	4	#16	STR.	9020	56
✳ A133	4	#16	STR.	8600	53
✳ A134	4	#16	STR.	8200	51
✳ A135	4	#16	STR.	7800	48
✳ A136	4	#16	STR.	7400	46
✳ A137	4	#16	STR.	7000	43
✳ A138	4	#16	STR.	6580	41
✳ A139	4	#16	STR.	6180	38
✳ A140	4	#16	STR.	5780	36
✳ A141	4	#16	STR.	5380	33
✳ A142	4	#16	STR.	4960	31
✳ A143	4	#16	STR.	4560	28
✳ A144	4	#16	STR.	4160	26
✳ A145	4	#16	STR.	3760	23
✳ A146	4	#16	STR.	3340	21
✳ A147	4	#16	STR.	2940	18
✳ A148	4	#16	STR.	2600	16
✳ A149	4	#16	STR.	2200	14
✳ A150	4	#16	STR.	1800	11
✳ A151	4	#16	STR.	1380	9
✳ A152	4	#16	STR.	980	6
✳ A153	4	#16	STR.	580	4

BAR	NO.	SIZE	TYPE	LENGTH	WEIGHT
A2	8	#13	STR.	6400	51
A201	4	#13	STR.	6140	24
A202	4	#13	STR.	5880	23
A203	4	#13	STR.	5620	22
A204	4	#13	STR.	5360	21
A205	4	#13	STR.	5100	20
A206	2	#13	STR.	9100	18
A207	2	#13	STR.	8580	17
A208	2	#13	STR.	8060	16
A209	2	#13	STR.	7540	15
A210	2	#13	STR.	7040	14
A211	2	#13	STR.	6520	13
A212	2	#13	STR.	5920	12
A213	2	#13	STR.	5400	11
A214	2	#13	STR.	4880	10
A215	2	#13	STR.	4360	9
A216	2	#13	STR.	3840	8
A217	2	#13	STR.	3320	7
A218	2	#13	STR.	2820	6
A219	2	#13	STR.	2300	5
A220	2	#13	STR.	1780	4
A221	2	#13	STR.	1260	3
A222	2	#13	STR.	740	1
A225	8	#13	STR.	6200	49
A226	8	#13	STR.	6000	48
A227	8	#13	STR.	5800	46
A228	8	#13	STR.	5600	45
A229	8	#13	STR.	5400	43
A230	8	#13	STR.	5200	41
A231	8	#13	STR.	5000	40
A232	4	#13	STR.	9020	36
A233	4	#13	STR.	8600	34
A234	4	#13	STR.	8200	33
A235	4	#13	STR.	7800	31
A236	4	#13	STR.	7400	29
A237	4	#13	STR.	7000	28
A238	4	#13	STR.	6580	26
A239	4	#13	STR.	6180	25
A240	4	#13	STR.	5780	23
A241	4	#13	STR.	5380	21
A242	4	#13	STR.	4960	20
A243	4	#13	STR.	4560	18
A244	4	#13	STR.	4160	17
A245	4	#13	STR.	3760	15
A246	4	#13	STR.	3340	13
A247	4	#13	STR.	2940	12
A248	4	#13	STR.	2600	10
A249	4	#13	STR.	2200	9
A250	4	#13	STR.	1800	7
A251	4	#13	STR.	1400	6
A252	4	#13	STR.	980	4
A253	4	#13	STR.	580	2

BAR	NO.	SIZE	TYPE	LENGTH	WEIGHT
✳ B100	1	#19	STR.	18280	41
✳ B101	2	#19	STR.	18100	81
✳ B102	2	#19	STR.	17840	80
✳ B103	2	#19	STR.	17560	78
✳ B104	2	#19	STR.	17300	77
✳ B105	2	#19	STR.	17020	76
✳ B106	2	#19	STR.	16760	75
✳ B107	2	#19	STR.	16480	74
✳ B108	2	#19	STR.	16200	72
✳ B109	2	#19	STR.	15940	71
✳ B110	2	#19	STR.	15660	70
✳ B111	2	#19	STR.	15400	69
✳ B112	2	#19	STR.	15120	68
✳ B113	2	#19	STR.	14840	66
✳ B114	2	#19	STR.	14580	65
✳ B115	2	#19	STR.	14300	64
✳ B116	2	#19	STR.	14040	63
✳ B117	2	#19	STR.	13760	62
✳ B118	2	#19	STR.	13480	60
✳ B119	2	#19	STR.	13220	59
✳ B120	2	#19	STR.	12940	58
✳ B121	2	#19	STR.	12680	57
✳ B122	2	#19	STR.	12400	55
✳ B123	2	#19	STR.	12120	54
✳ B124	2	#19	STR.	11860	53
✳ B125	2	#19	STR.	11580	52
✳ B126	2	#19	STR.	11320	51
✳ B127	2	#19	STR.	11040	49
✳ B128	2	#19	STR.	10760	48
✳ B129	2	#19	STR.	10500	47
✳ B130	2	#19	STR.	10220	46
✳ B131	2	#19	STR.	9960	45
✳ B132	2	#19	STR.	9680	43
✳ B133	2	#19	STR.	9400	42
✳ B134	2	#19	STR.	9140	41
✳ B135	2	#19	STR.	8860	40
✳ B136	2	#19	STR.	8600	38
✳ B137	2	#19	STR.	8320	37
✳ B138	2	#19	STR.	8040	36
✳ B139	2	#19	STR.	7780	35
✳ B140	2	#19	STR.	7500	34
B200	1	#25	STR.	18280	73
B201	2	#25	STR.	18280	145
B202	2	#25	STR.	18020	143
B203	2	#25	STR.	17740	141
B204	2	#25	STR.	17460	139
B205	2	#25	STR.	17200	137
B206	2	#25	STR.	16920	134
B207	2	#25	STR.	16640	132
B208	2	#25	STR.	16380	130
B209	2	#25	STR.	16100	128
B210	2	#25	STR.	15840	126

BAR	NO.	SIZE	TYPE	LENGTH	WEIGHT
B211	2	#25	STR.	15560	124
B212	2	#25	STR.	15300	122
B213	2	#25	STR.	15020	119
B214	2	#25	STR.	14740	117
B215	2	#25	STR.	14480	115
B216	2	#25	STR.	14200	113
B217	2	#25	STR.	13940	111
B218	2	#25	STR.	13660	109
B219	2	#25	STR.	13380	106
B220	2	#25	STR.	13120	104
B221	2	#25	STR.	12840	102
B222	2	#25	STR.	12580	100
B223	2	#25	STR.	12300	98
B224	2	#25	STR.	12020	96
B225	2	#25	STR.	11760	93
B226	2	#25	STR.	11480	91
B227	2	#25	STR.	11220	89
B228	2	#25	STR.	10940	87
B229	2	#25	STR.	10660	85
B230	2	#25	STR.	10400	83
B231	2	#25	STR.	10120	80
B232	2	#25	STR.	9860	78
B233	2	#25	STR.	9580	76
B234	2	#25	STR.	9300	74
B235	2	#25	STR.	9040	72
B236	2	#25	STR.	8760	70
B237	2	#25	STR.	8500	68
B238	2	#25	STR.	8220	65
B239	2	#25	STR.	8000	64
B240	2	#25	STR.	7680	61
✳ B3	7	#16	STR.	3660	40
✳ B4	7	#16	STR.	3940	43
✳ B5	1	#16	3	2500	4
✳ B6	1	#16	3	2020	3
✳ G1	1	#16	STR.	14040	22
✳ G2	2	#16	STR.	11380	35
✳ S1	58	#16	STR.	980	88
✳ S2	42	#16	1	1220	80
✳ S3	20	#16	2	680	21

REINFORCING STEEL		kg. 5261
✳ EPOXY COATED REINFORCING STEEL		kg. 4260
CLASS AA CONCRETE		
POUR 1 : SLAB	CU. METERS	50.5
POUR 2 : RAIL	CU. METERS	2.0
TOTAL	CU. METERS	52.5
ELASTOMERIC CONCRETE	CU. METERS	0.3

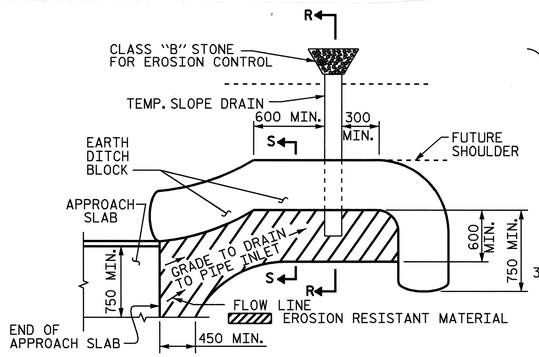

NOTE: IMMEDIATELY AFTER THE CONSTRUCTION OF THE APPROACH SLAB, THE CONTRACTOR SHALL PROVIDE TEMPORARY BERM AND SLOPE DRAIN. CONTRACTOR SHALL GRADE TO PIPE INLET AND PROVIDE EROSION RESISTANT MATERIAL AS SHOWN. THE EROSION RESISTANT MATERIAL SHALL BE EITHER :
1) ASPHALT PLANT MIX, TYPE 1 OR TYPE 2, 50mm MIN. DEPTH,
2) EROSION CONTROL MAT, OR
3) CONCRETE, AS DIRECTED BY THE ENGINEER.
THE SLOPE DRAIN SHALL CONSIST OF A NON-PERFORATED TEMPORARY DRAINAGE PIPE, 305mm IN DIAMETER.

PLAN VIEW

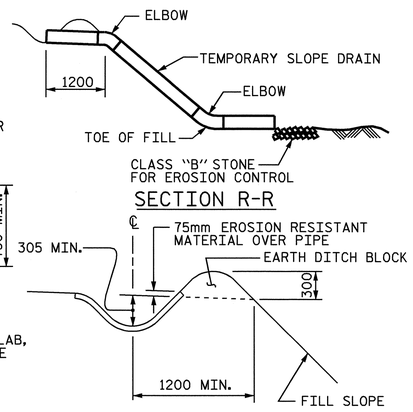

SECTION R-R

SECTION S-S

TEMPORARY BERM AND SLOPE DRAIN DETAILS

(TO BE USED WHEN SHOULDER BERM GUTTER IS REQUIRED)

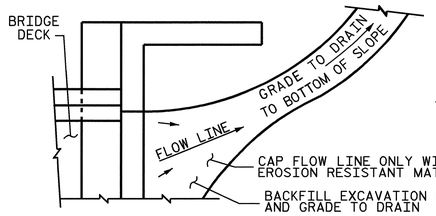

NOTE: IF THE APPROACH SLAB IS NOT CONSTRUCTED IMMEDIATELY AFTER THE BACKFILLING OF THE END BENT EXCAVATION, GRADE TO DRAIN TO THE BOTTOM OF THE SLOPE AND PROVIDE EROSION RESISTANT MATERIAL, SUCH AS FIBERGLASS ROVING OR AS DIRECTED BY THE ENGINEER TO PREVENT SOIL EROSION AND TO PROTECT THE AREA ADJACENT TO THE STRUCTURE. THE CONTRACTOR WILL BE REQUIRED TO REMOVE THESE MATERIALS PRIOR TO CONSTRUCTION OF THE APPROACH SLAB.

TEMPORARY DRAINAGE DETAIL

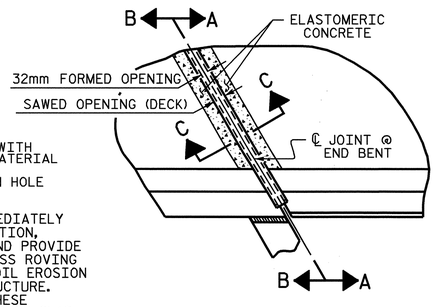

PLAN

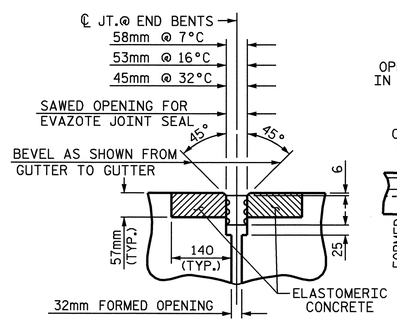

SECTION C-C
EVAZOTE JOINT SEAL

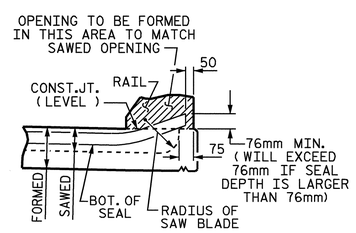

SECTION A-A

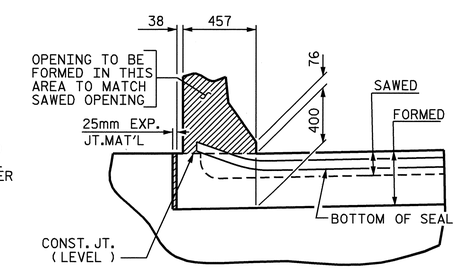

SECTION B-B

JOINT SEAL DETAILS @ END BENT

(FOR BARRIER RAIL)

NORTH CAROLINA PROFESSIONAL SEAL 20211 ENGINEER THOMAS G. PAYNE
8/24/04

PROJECT NO. R-2206B
LINCOLN COUNTY
STATION 123+38.105 -L-

SHEET 3 OF 3

STATE OF NORTH CAROLINA
DEPARTMENT OF TRANSPORTATION
RALEIGH

BRIDGE APPROACH SLAB FOR FLEXIBLE PAVEMENT WITH BARRIER RAIL (RIGHT LANE)

REVISIONS								SHEET NO.
NO.	BY:	DATE:	NO.	BY:	DATE:	NO.	BY:	DATE:	S-86
1			3						TOTAL SHEETS
2			4						86

DRAWN BY : Keith D. Layne DATE : 4-28-04
CHECKED BY : A. CHAN DATE : 5-7-04

24-AUG-2004 13:16
W:\squadt\r2206b\FInal Plans\str2\r2206b02as.dgn
tpayne

STR. #2