PROJECT REFERENCE NO.	SHEET NO.
R-2206C	UC-10
DESIGNED BY: MDS	
DRAWN BY: MDS	
CHECKED BY: CDB	
APPROVED BY: CDB	
REVISED:	

METRIC

NORTH CAROLINA DEPARTMENT OF TRANSPORTATION
DESIGN SERVICES UNIT
PHONE:(919)250-4128
FAX:(919)250-4119

NORTH CAROLINA PROFESSIONAL SEAL 23041 ENGINEER COREY D. BOUSQUET July 7, 2004

UTILITY CONSTRUCTION PLANS ONLY

UTILITY CONSTRUCTION

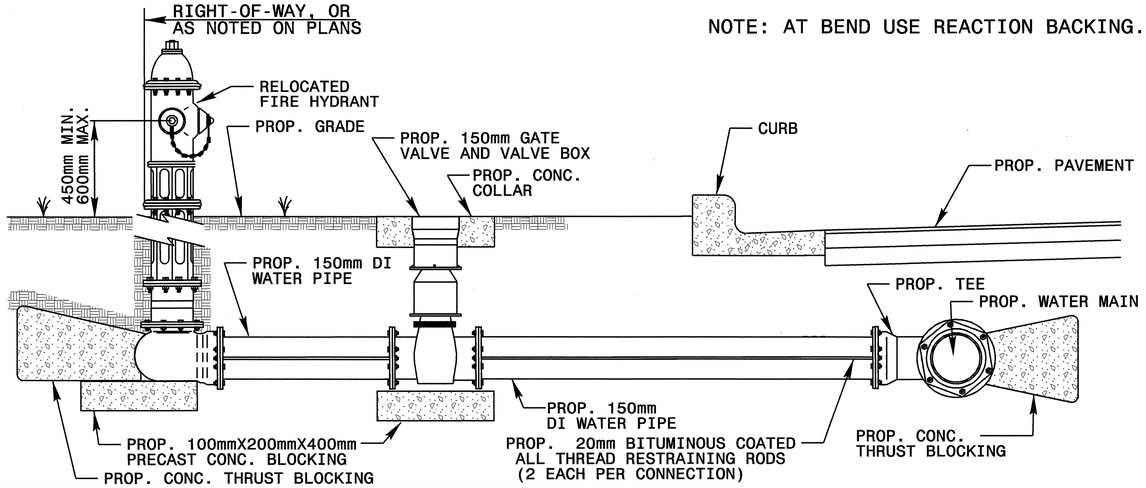

FIRE HYDRANT RELOCATION DETAIL

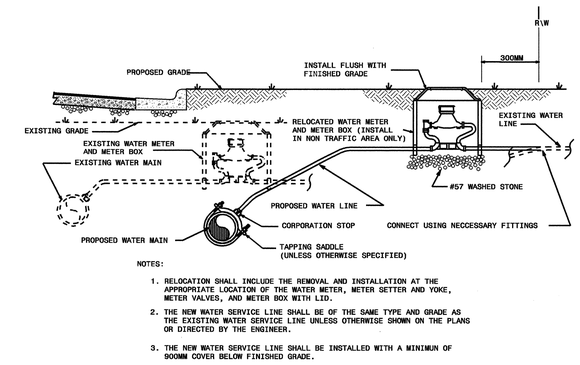

NOTES:

1. RELOCATION SHALL INCLUDE THE REMOVAL AND INSTALLATION AT THE APPROPRIATE LOCATION OF THE WATER METER, METER SETTER AND YOKE, METER VALVES, AND METER BOX WITH LID.
2. THE NEW WATER SERVICE LINE SHALL BE OF THE SAME TYPE AND GRADE AS THE EXISTING WATER SERVICE LINE UNLESS OTHERWISE SHOWN ON THE PLANS OR DIRECTED BY THE ENGINEER.
3. THE NEW WATER SERVICE LINE SHALL BE INSTALLED WITH A MINIMUN OF 900MM COVER BELOW FINISHED GRADE.

WATER METER RELOCATION DETAIL

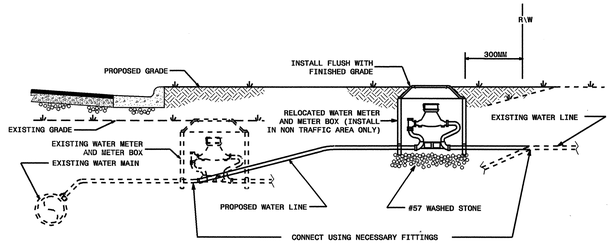

NOTES:

1. RELOCATION SHALL INCLUDE THE REMOVAL AND INSTALLATION AT THE APPROPRIATE LOCATION OF THE WATER METER, METER SETTER AND YOKE, METER VALVES, AND METER BOX WITH LID.
2. THE NEW WATER SERVICE LINE SHALL BE OF THE SAME TYPE AND GRADE AS THE EXISTING WATER SERVICE LINE UNLESS OTHERWISE SHOWN ON THE PLANS OR DIRECTED BY THE ENGINEER.
3. THE NEW WATER SERVICE LINE SHALL BE INSTALLED WITH A MINIMUN OF 900MM COVER BELOW FINISHED GRADE.

WATER METER RELOCATION DETAIL

CLASS "C"

(BEDDING FOR P.V.C. PIPE)

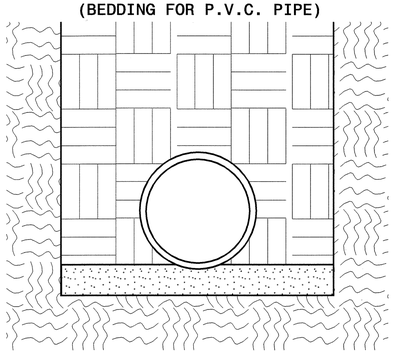

PIPE BEDDED IN LOOSE MATERIAL, LIGHTLY TAMPED WITH A MINIMUM OF 150mm UNDER PIPE. TRENCH BACKFILLED IN LOOSE 150mm LAYERS COMPACTED TO TOP OF TRENCH USING LOCAL EXCAVATED MATERIAL, IF APPROVED BY THE ENGINEER, OR SELECT MATERIAL. ALL MATERIAL SHALL BE FREE OF ROCKS, FOREIGN MATERIAL, AND FROZEN EARTH. COMPACTION SHALL BE TO APPROX. 95% DENSITY IN ACCORDANCE WITH AASHTO T-99 AS MODIFIED BY THE DEPARTMENT OF TRANSPORTATION.

TYPE "2"

(BEDDING FOR D.I. PIPE)

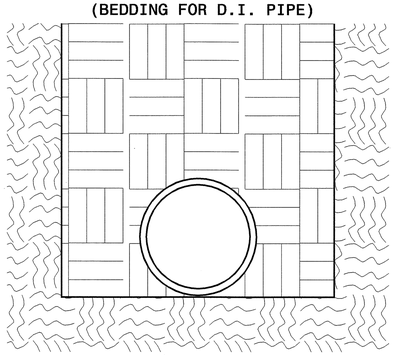

PIPE BEDDED IN FLAT-BOTTOM TRENCH. TRENCH BACKFILLED IN LOOSE 6" LAYERS COMPACTED TO TOP OF TRENCH USING LOCAL EXCAVATED MATERIAL, IF APPROVED BY THE ENGINEER, OR SELECT MATERIAL. ALL MATERIAL SHALL BE FREE OF ROCKS, FOREIGN MATERIAL, AND FROZEN EARTH. COMPACTION SHALL BE TO APPROX. 95% DENSITY IN ACCORDANCE WITH AASHTO T-99 AS MODIFIED BY THE DEPARTMENT OF TRANSPORTATION.

MAXIMUM TRENCH WIDTH AT TOP OF PIPE

NOMINAL PIPE SIZE (INCHES)	TRENCH WIDTH (INCHES)	NOMINAL PIPE SIZE (INCHES)	TRENCH WIDTH (INCHES)
4	28	20	44
6	30	24	48
8	32	30	54
10	34	36	60
12	36	42	66
14	38	48	72
16	40	54	78
18	42		

E:\Un_Lines\R2206c_UC_10_detail.DGN
06-JUL-2004 16:50
mesyder
AT DS214771