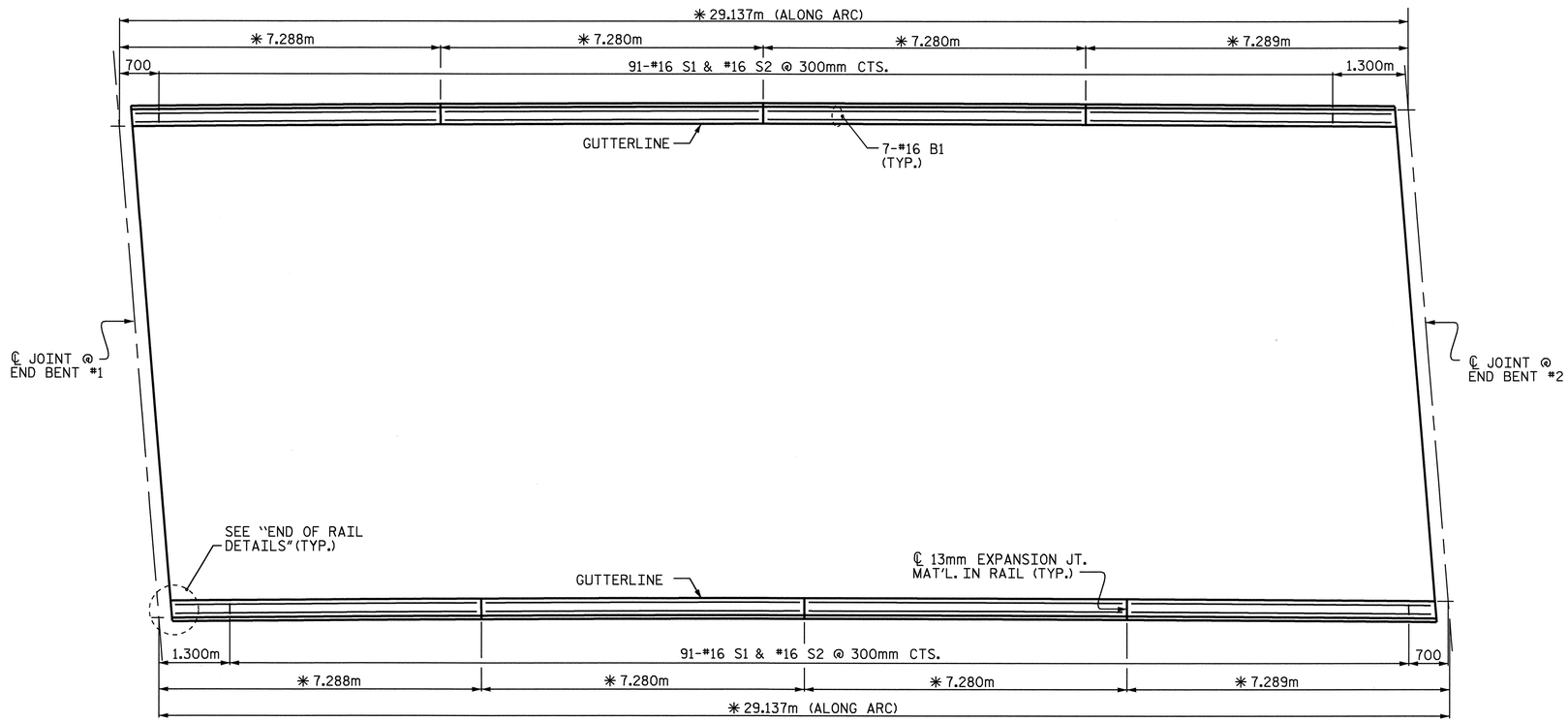

PLAN

✳ ARC DIMENSION ALONG OUTSIDE EDGE OF SUPERSTRUCTURE

NOTES

THE BARRIER RAIL SHALL NOT BE CAST UNTIL ALL SLAB CONCRETE HAS BEEN CAST AND HAS REACHED A MINIMUM COMPRESSIVE STRENGTH OF 20.7 MPa.

WHEN EVAZOTE JOINT SEAL IS REQUIRED, THE JOINT IN THE DECK SHALL BE SAWED PRIOR TO THE CASTING OF BARRIER RAIL.

ALL REINFORCING STEEL IN BARRIER RAILS SHALL BE EPOXY COATED.

THE #16S3 AND #16S4 BARS SHALL BE INSTALLED, USING AN ADHESIVE ANCHORING SYSTEM, AFTER SAWING THE JOINT. FOR ADHESIVELY ANCHORED ANCHOR BOLTS OR DOWELS, SEE SPECIAL PROVISIONS. THE YIELD LOAD FOR THE #16S3 AND #16S4 BARS IS 82.7 kN. FIELD TESTING FOR THE ADHESIVE BONDING SYSTEM IS NOT REQUIRED.

VERTICAL GROOVED CONTRACTION JOINTS, 12mm IN DEPTH, SHALL BE TOOLED IN ALL EXPOSED FACES OF THE BARRIER RAIL AND IN ACCORDANCE WITH ARTICLE 825-10(B) OF THE STANDARD SPECIFICATIONS. THE CONTRACTION JOINT SHALL BE LOCATED AT EACH THIRD POINT BETWEEN BARRIER RAIL EXPANSION JOINTS. ONLY ONE CONTRACTION JOINT IS REQUIRED AT MIDPOINT OF BARRIER RAIL SEGMENTS LESS THAN 6.1m IN LENGTH AND NO CONTRACTION JOINTS ARE REQUIRED FOR THOSE SEGMENTS LESS THAN 3.5m IN LENGTH.

#16S1 & #16S2 MAY BE SHIFTED SLIGHTLY AS NECESSARY TO MAINTAIN 50mm COVER AT 13mm EXPANSION JOINTS IN RAIL.

BAR TYPES

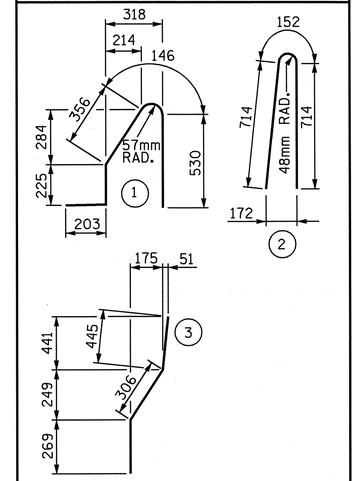

ALL BAR DIMENSIONS ARE OUT TO OUT

BILL OF MATERIAL

FOR CONCRETE BARRIER RAIL ONLY

BAR	NO.	SIZE	TYPE	LENGTH	WEIGHT
✳B1	56	#16	STR	7160	622
✳S1	182	#16	1	1460	412
✳S2	182	#16	2	1580	446
✳S3	12	#16	3	1020	19
✳S4	12	#16	STR	940	18

✳EPOXY COATED REINFORCING STEEL	1517 kg
CLASS AA CONCRETE	14.6 CU. METERS
CONCRETE BARRIER RAIL	58.274 METERS

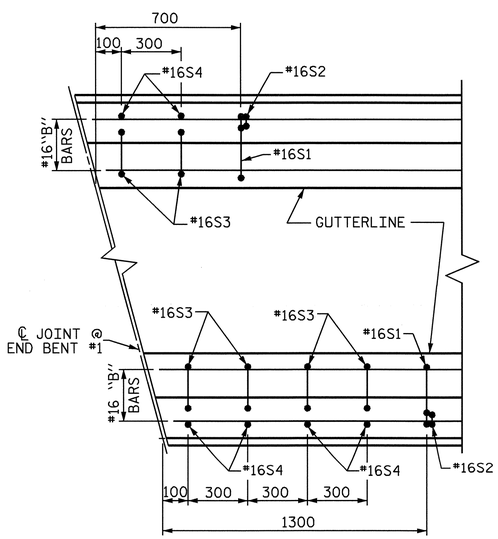

PLAN
(END BENT #1 SHOWN, END BENT #2 SIMILAR)

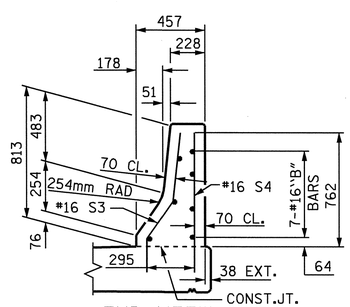

END VIEW

END OF RAIL DETAILS

(FOR ADHESIVE ANCHORING AT SAWED JOINTS)

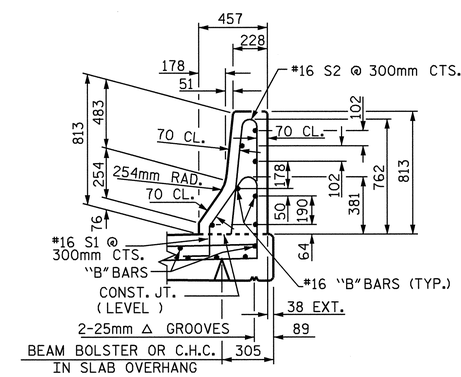

SECTION THRU RAIL

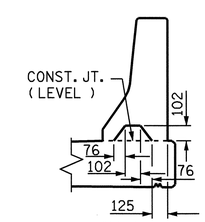

SECTION S-S
AT DAM IN OPEN JOINT
(THIS IS TO BE USED ONLY WHEN SLIP FORM IS USED)

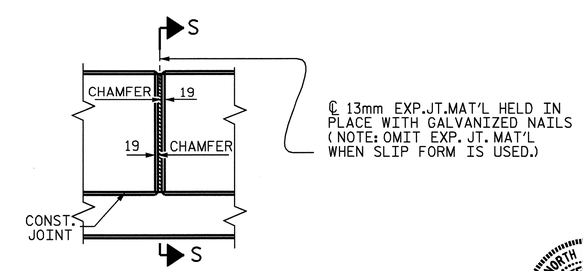

ELEVATION AT EXPANSION JOINTS

BARRIER RAIL DETAILS

PROJECT NO. R-2206C
LINCOLN-CATAWBA COUNTY
STATION: 245+91.502 -L-

STATE OF NORTH CAROLINA
DEPARTMENT OF TRANSPORTATION
RALEIGH

SUPERSTRUCTURE

CONCRETE BARRIER RAIL

LEFT LANE

NORTH CAROLINA PROFESSIONAL SEAL 022516 ENGINEER DALY E. MURRAY
9/10/04

REVISIONS						SHEET NO.
NO.	BY:	DATE:	NO.	BY:	DATE:	S-205
1			3			TOTAL SHEETS
2			4			374

DRAWN BY : M.D.PISO DATE : 10/03
CHECKED BY : M.M.PARSONS DATE : 5/14/04