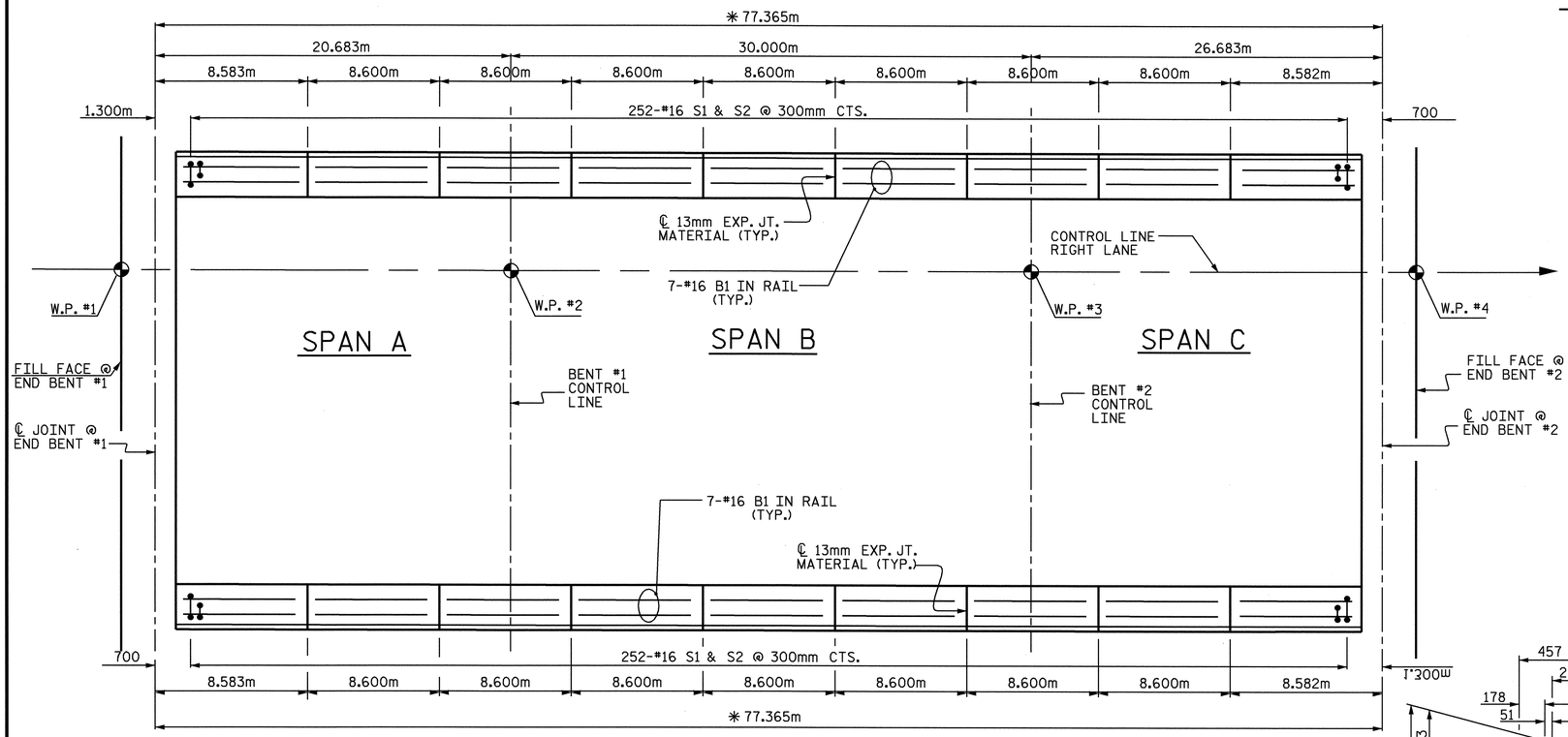

PLAN OF BARRIER RAIL

✳ ALONG OUTSIDE EDGE OF SUPERSTRUCTURE

NOTES

THE BARRIER RAIL IN A CONTINUOUS UNIT SHALL NOT BE CAST UNTIL ALL SLAB CONCRETE IN THAT UNIT HAS BEEN CAST AND HAS REACHED A MINIMUM COMPRESSIVE STRENGTH OF 20.7 MPa.

WHEN EVAZOTE JOINT SEAL IS REQUIRED, THE JOINT IN THE DECK SHALL BE SAWED PRIOR TO THE CASTING OF BARRIER RAIL.

ALL REINFORCING STEEL IN BARRIER RAILS SHALL BE EPOXY COATED.

THE #16 S3 AND #16 S4 BARS SHALL BE INSTALLED, USING AN ADHESIVE ANCHORING SYSTEM. AFTER SAWING THE JOINT. FOR ADHESIVELY ANCHORED ANCHOR BOLTS OR DOWELS, SEE SPECIAL PROVISIONS. THE YEILD LOAD FOR THE #16 S3 AND #16 S4 BARS IS 82.7 kN. FIELD TESTING FOR THE ADHESIVE BONDING SYSTEM IS NOT REQUIRED.

VERTICAL GROOVED CONTRACTION JOINTS, 12mm IN DEPTH, SHALL BE TOOLED IN ALL EXPOSED FACES OF THE BARRIER RAIL AND IN ACCORDANCE WITH ARTICLE 825-10(B) OF THE STANDARD SPECIFICATIONS. THE CONTRACTION JOINT SHALL BE LOCATED AT EACH THIRD POINT BETWEEN BARRIER RAIL EXPANSION JOINTS. ONLY ONE CONTRACTION JOINT IS REQUIRED AT MIDPOINT OF BARRIER RAIL SEGMENTS LESS THAN 6.1m IN LENGTH AND NO CONTRACTION JOINTS ARE REQUIRED FOR THOSE SEGMENTS LESS THAN 3.5m IN LENGTH.

#16 S1 AND #16 S2 MAY BE SHIFTED SLIGHTLY AS NECESSARY TO MAINTAIN 50mm COVER AT 13mm EXPANSION JOINTS IN RAIL.

BAR TYPES

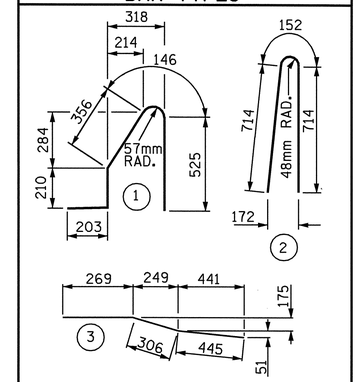

ALL BAR DIMENSIONS ARE OUT TO OUT

BILL OF MATERIAL

FOR CONCRETE BARRIER RAIL ONLY

BAR	NO.	SIZE	TYPE	LENGTH	WEIGHT
✳ B1	126	#16	STR	8460	1654
✳ S1	504	#16	1	1440	1126
✳ S2	504	#16	2	1580	1236
✳ S3	12	#16	3	1020	19
✳ S4	12	#16	STR.	960	18

✳ EPOXY COATED REINFORCING STEEL 4053 kg

CLASS AA CONCRETE 38.8 CU. METER

CONCRETE BARRIER RAIL 154.730 METERS

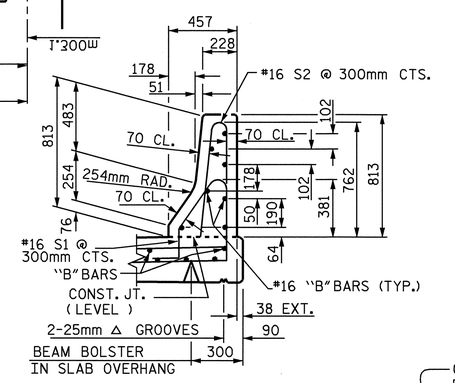

SECTION THRU RAIL

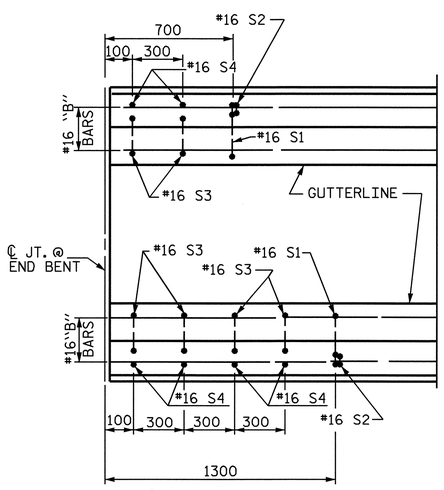

PLAN

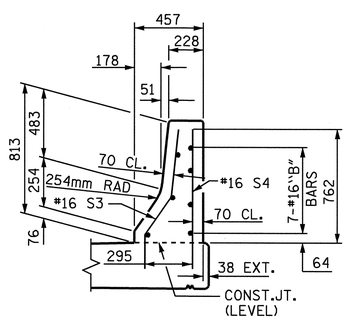

END VIEW

END OF RAIL DETAILS

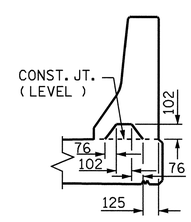

SECTION S-S

AT DAM IN OPEN JOINT (THIS IS TO BE USED ONLY WHEN SLIP FORM IS USED)

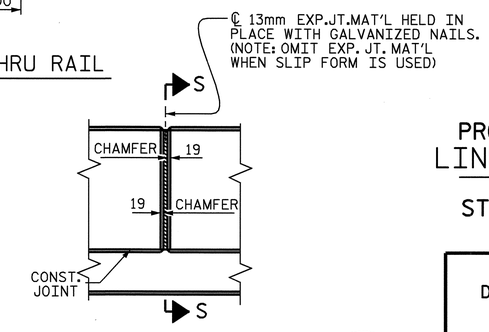

ELEVATION AT EXPANSION JOINTS

BARRIER RAIL DETAILS

NORTH CAROLINA PROFESSIONAL SEAL 022516 ENGINEER EMILY E. MURRAY

Emily E. Murray
9/8/04

PROJECT NO. R-2206C
LINCOLN-CATAWBA COUNTY
STATION: 199+48.000-L-

STATE OF NORTH CAROLINA
DEPARTMENT OF TRANSPORTATION
RALEIGH

STANDARD
CONCRETE BARRIER RAIL
RIGHT LANE

ASSEMBLED BY : M.D.PISO	DATE : 9/03
CHECKED BY : M.M.PARSONS	DATE : 9/03
DRAWN BY : ARB 5/87	REV. 8/16/99 RWW/LES
CHECKED BY : SJD 9/87	REV. 10/17/00 RWW/LES
	REV. 5/7/03 RWW/JTE

REVISIONS								SHEET NO.
NO.	BY:	DATE:	NO.	BY:	DATE:			S-82
1			3					TOTAL SHEETS
2			4					374