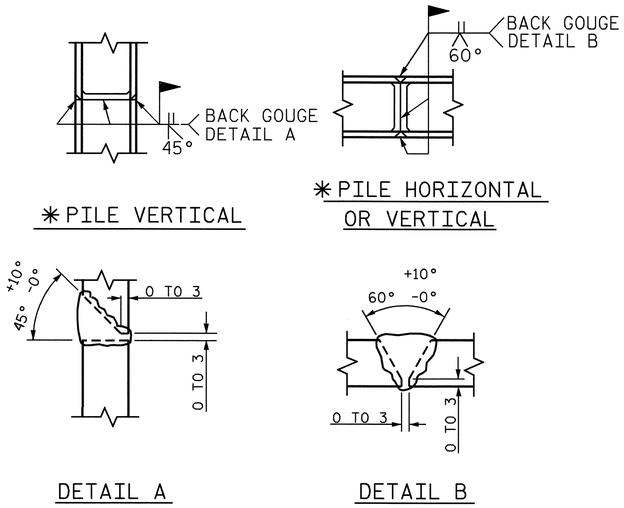

✱POSITION OF PILE DURING WELDING.

PILE SPLICE DETAILS

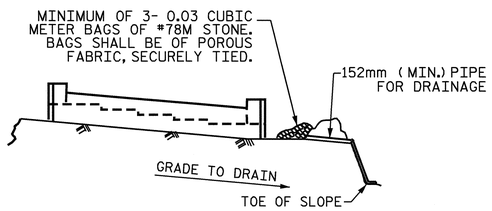

BAGGED STONE AND PIPE SHALL BE PLACED IMMEDIATELY AFTER COMPLETION OF END BENT EXCAVATION. PIPE MAY BE EITHER CONCRETE, CORRUGATED STEEL, CORRUGATED ALUMINUM ALLOY, OR CORRUGATED PLASTIC. PERFORATED PIPE WILL NOT BE ALLOWED.

BAGGED STONE SHALL REMAIN IN PLACE UNTIL THE ENGINEER DIRECTS THAT IT BE REMOVED. THE CONTRACTOR SHALL REMOVE AND DISPOSE OF SILT ACCUMULATIONS AT BAGGED STONE WHEN SO DIRECTED BY THE ENGINEER. BAGS SHALL BE REMOVED AND REPLACED WHENEVER THE ENGINEER DETERMINES THAT THEY HAVE DETERIORATED AND LOST THEIR EFFECTIVENESS.

NO SEPARATE PAYMENT WILL BE MADE FOR THIS WORK AND THE ENTIRE COST OF THIS WORK SHALL BE INCLUDED IN THE UNIT CONTRACT PRICE BID FOR THE SEVERAL PAY ITEMS.

TEMPORARY DRAINAGE AT END BENT

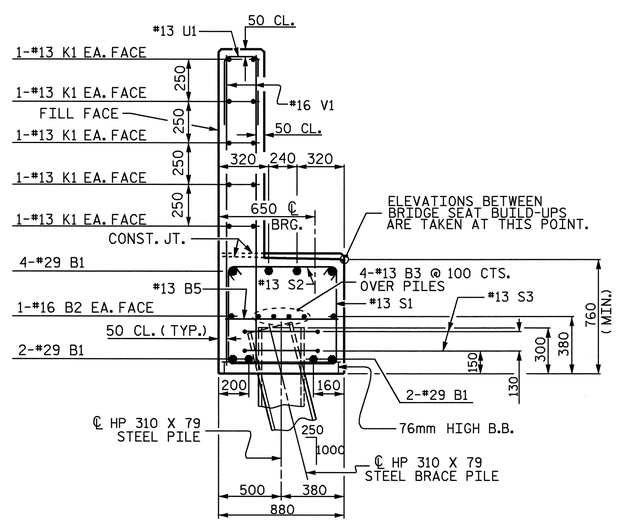

SECTION A-A

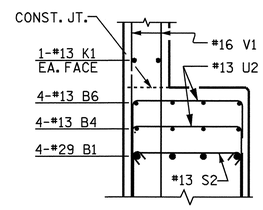

SECTION B-B

BAR TYPES

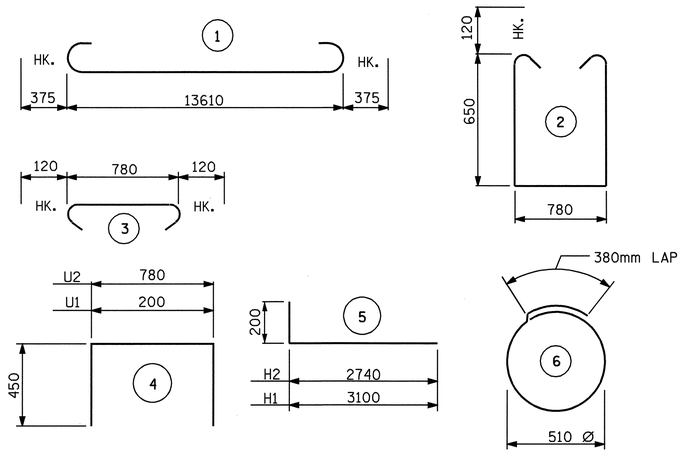

ALL BAR DIMENSIONS ARE OUT TO OUT.

BILL OF MATERIAL
END BENT NO. 1

BAR	NO.	SIZE	TYPE	LENGTH	WEIGHT
B1	8	29	1	14360	581
B2	2	16	STR.	13640	42
B3	8	13	STR.	7200	57
B4	4	13	STR.	5640	22
B5	11	13	STR.	780	9
B6	8	13	STR.	880	7
H1	22	13	5	3300	72
H2	20	13	5	2940	58
K1	20	13	STR.	7200	143
K2	8	13	STR.	840	7
S1	68	13	2	2320	157
S2	68	13	3	1020	69
S3	14	13	6	1980	28
U1	40	13	4	1100	44
U2	19	13	4	1680	32
V1	80	16	STR.	1860	231
V2	30	16	STR.	2440	114
V3	28	16	STR.	2220	96
REINFORING STEEL				kg	1769

CLASS A CONCRETE

POUR 1 - CAP & LOWER PORTION OF WINGS = 11.7C.M.

POUR 2 - UPPER PORTION OF WINGS & BACKWALL = 7.9C.M.

CLASS A CONCRETE TOTAL = 19.6C.M.

HP 310 X 79 STEEL PILES

NO. 7 35.5m

PROJECT NO. R-2206C
LINCOLN-CATAWBA COUNTY
STATION: 223+03.850-L-

SHEET 3 OF 3

STATE OF NORTH CAROLINA
DEPARTMENT OF TRANSPORTATION
RALEIGH

SUBSTRUCTURE

END BENT #1

RIGHT LANE

NORTH CAROLINA PROFESSIONAL SEAL 022516 ENGINEER EMILY E. MURRAY
9/8/09

REVISIONS							SHEET NO.
NO.	BY:	DATE:	NO.	BY:	DATE:		S-183
1			3				TOTAL SHEETS
2			4				374

STR. #10

DRAWN BY : M.D.PISO DATE : 03/2004
CHECKED BY : P.ADKINS DATE : 07/2004