BM #19: RAILROAD SPIKE IN BASE OF 10" HICKORY TREE, 388.74' LEFT OF STA 508+00.88 -L-, EL. 377.600, NGVD 29

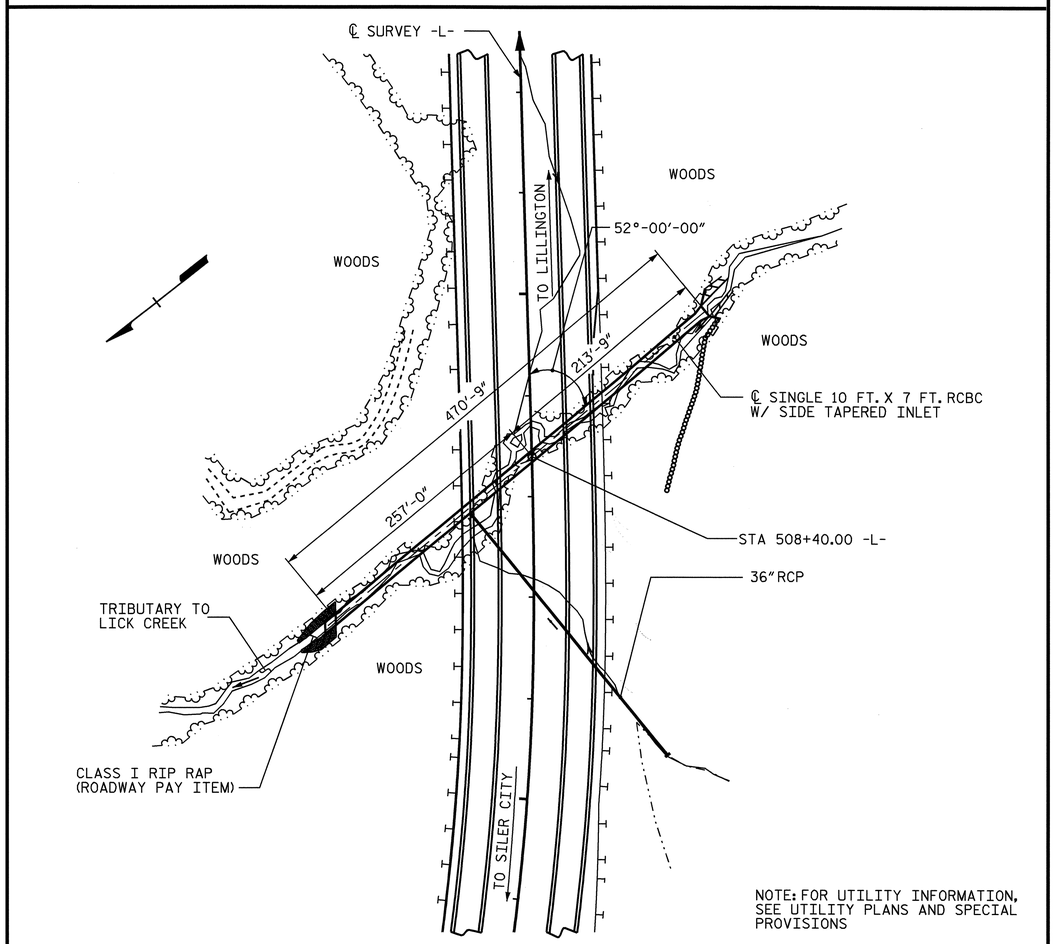

NOTE: FOR UTILITY INFORMATION, SEE UTILITY PLANS AND SPECIAL PROVISIONS

LOCATION SKETCH

GRADE POINT ELEV. @ STA. 508+40.00 -L-	= 417.104
BED ELEV. @ STA 508+40.00 -L-	= 353.070
ROADWAY SLOPES	= 2:1

HYDROGRAPHIC DATA

DESIGN DISCHARGE	= 440 cfs
FREQUENCY OF DESIGN FLOOD	= 50 YR
DESIGN HIGH WATER ELEVATION	= 366.66
DRAINAGE AREA	= 191 AC.
BASIC DISCHARGE (Q100)	= 505 cfs
BASIC HIGH WATER ELEVATION	= 367.20

OVERTOPPING FLOOD DATA

OVERTOPPING DISCHARGE	= 870+ cfs
FREQUENCY OF OVERTOPPING FLOOD	= 500+ YR
OVERTOPPING FLOOD ELEVATION	= 393.50

REINFORCING BAR SCHEDULE FOR BARREL

BAR	NO.	SIZE	TYPE	LENGTH	WEIGHT
A1	1256	7	6	10'-7"	27170
A2	1256	7	6	8'-2"	20966
A100	907	8	STR	11'-4"	27446
A101	3	8	STR	9'-5"	75
A102	3	8	STR	7'-8"	61
A103	3	8	STR	5'-11"	47
A104	3	8	STR	4'-1"	33
A105	3	8	STR	2'-4"	19
A111	5	8	STR	12'-4"	165
A112	5	8	STR	13'-4"	178
A113	5	8	STR	14'-4"	191
A114	6	8	STR	15'-3"	244
A200	926	8	STR	11'-4"	28021
A211	5	8	STR	12'-3"	164
A212	5	8	STR	13'-2"	176
A213	5	8	STR	14'-1"	188
A214	5	8	STR	15'-0"	200
A215	3	8	STR	15'-11"	127
A400	10	4	STR	11'-4"	76
B1	1256	4	STR	10'-5"	8740
B2	1256	5	STR	6'-4"	8297
C1	901	4	STR	29'-1"	17504
C2	60	4	STR	14'-8"	588
C3	10	4	STR	11'-9"	78
D1	28	6	STR	3'-0"	126
D2	16	5	STR	4'-6"	75
D3	32	6	STR	2'-7"	124
F1	91	4	STR	6'-2"	375
F2	1	4	STR	7'-7"	5
F3	1	4	STR	9'-3"	6
F4	1	4	STR	10'-11"	7
G1	2	4	STR	14'-10"	20
G2	2	4	STR	16'-5"	22
S2	3	8	STR	14'-10"	119
			TOTAL LBS		141633

NOTES

ASSUMED LIVE LOAD ----------HS20-44 OR ALTERNATE LOADING.

DESIGN FILL---------- 56.87'

FOR OTHER DESIGN DATA AND NOTES SEE STANDARD NOTE SHEET.

3" Ø WEEP HOLES INDICATED TO BE IN ACCORDANCE WITH THE SPECIFICATIONS.

CONCRETE IN CULVERTS TO BE POURED IN THE FOLLOWING ORDER:

1. WING FOOTINGS AND FLOOR SLAB INCLUDING 4" OF ALL VERTICAL WALLS
2. THE REMAINING PORTIONS OF THE WALLS AND WINGS FULL HEIGHT FOLLOWED BY ROOF SLAB AND HEADWALLS.

THE RESIDENT ENGINEER SHALL CHECK THE LENGTH OF CULVERT BEFORE STAKING IT OUT TO MAKE CERTAIN THAT IT WILL PROPERLY TAKE CARE OF THE FILL.

DIMENSIONS FOR WING LAYOUT AS WELL AS ADDITIONAL REINFORCING STEEL EMBEDDED IN BARREL ARE SHOWN ON WING SHEET.

TRANSVERSE CONSTRUCTION JOINTS SHALL BE USED IN THE BARREL, SPACED TO LIMIT THE POURS TO A MAXIMUM OF 70 FT. LOCATION OF JOINTS SHALL BE SUBJECT TO APPROVAL OF THE ENGINEER.

AT THE CONTRACTOR'S OPTION, HE MAY SPLICE THE VERTICAL REINFORCING STEEL IN THE INTERIOR FACE OF EXTERIOR WALL ABOVE LOWER WALL CONSTRUCTION JOINT. THE SPLICE LENGTH SHALL BE PROVIDED IN THE SPLICE LENGTH CHART SHOWN ON THE PLANS. EXTRA WEIGHT OF STEEL DUE TO THE SPLICES SHALL BE PAID FOR BY THE CONTRACTOR.

AT THE CONTRACTOR'S OPTION THE VERTICAL CONSTRUCTION JOINT BETWEEN THE OUTLET WINGS AND THE BARREL MAY BE ELIMINATED AND THE "C" BARS IN THE BARREL MAY BE EXTENDED TO REPLACE THE "D" AND "H" BARS IN THE WINGS AND SLAB.

NO PRECAST CONCRETE BOX CULVERT OPTION WILL BE ALLOWED.

FOR SUBMITTAL OF WORKING DRAWINGS, SEE SPECIAL PROVISIONS.

FOR FALSEWORK AND FORMWORK, SEE SPECIAL PROVISIONS.

A 3 FOOT STRIP OF FILTER FABRIC SHALL BE ATTACHED TO THE FILL FACE OF THE WING CONVERING THE ENTIRE LENGTH OF THE EXPANSION JOINT.

FOR CULVERT DIVERSION DETAILS AND PAY ITEM, SEE EROSION CONTROL PLANS.

THE CONTRACTOR'S ATTENTION IS CALLED TO THE FACT THAT HARD ROCK MAY BE ENCOUNTERED WHEN EXCAVATING FOR THE CONSTRUCTION OF THE BOX CULVERT AT STA. 508+40.00 -L-.

TOTAL STRUCTURE QUANTITIES

CLASS A CONCRETE		
BARREL & TAPERED INLET	1023.2	C.Y.
SILLS	5.9	C.Y.
INLET WING ETC.	10.3	C.Y.
OUTLET WING ETC.	18.9	C.Y.
TOTAL	1058.3	C.Y.
REINFORCING STEEL		
BARREL & TAPERED INLET	141633	LBS.
INLET WINGS ETC.	576	LBS.
OUTLET WINGS ETC.	1338	LBS.
TOTAL	143547	LBS.
CULVERT EXCAVATION ---------- LUMP SUM		
FOUNDATION COND. MAT'L ---------- 410 TONS		
PLAIN RIP RAP CLASS B---------- 109 TONS		

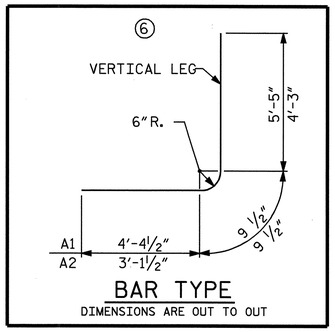

BAR TYPE
DIMENSIONS ARE OUT TO OUT

SPLICE LENGTH CHART

BAR	SIZE	SPLICE LENGTH
B1	4	1'-9"
C1	4	1'-11"

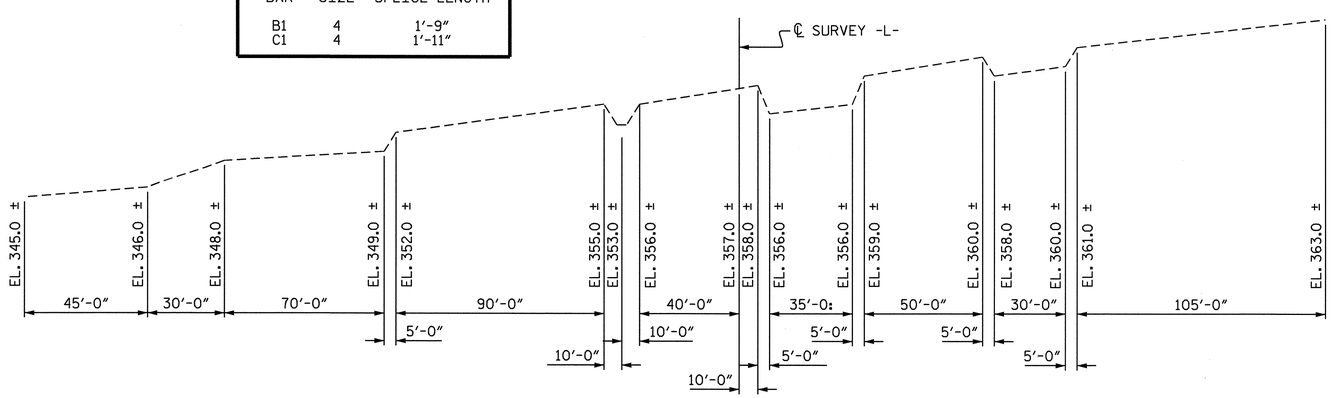

PROFILE ALONG ℄ CULVERT

PROJECT NO. R-2417BB
LEE COUNTY
STATION: 508+40.00 -L-

SHEET 1 OF 6

STATE OF NORTH CAROLINA
DEPARTMENT OF TRANSPORTATION
RALEIGH

BARREL STANDARD
SINGLE 10 FT. X 7 FT.
CONCRETE BOX CULVERT
WITH SIDE TAPERED INLET
52° SKEW

AUGUST 1989

REVISIONS							
NO.	BY:	DATE:	NO.	BY:	DATE:	SHEET NO. C-1
1			3			TOTAL SHEETS 11
2			4			

STD. NO. CB41A

ASSEMBLED BY : D.A.STARK	DATE : 4/03	SPECIAL	
CHECKED BY : P.SPROUSE	DATE : 4/03		
DRAWN BY : R.W. WRIGHT	DATE : AUG. 1989	STANDARD	
CHECKED BY : A.R. BISSETTE	DATE : AUG. 1989		

REVISED 11-13-91 BY E.L.R. CHECKED BY G.R.P.
ADDED 8-22-89