PROJECT REFERENCE NO.	SHEET NO.
R-2417BB	Sig. 24

SHEET
SD-3

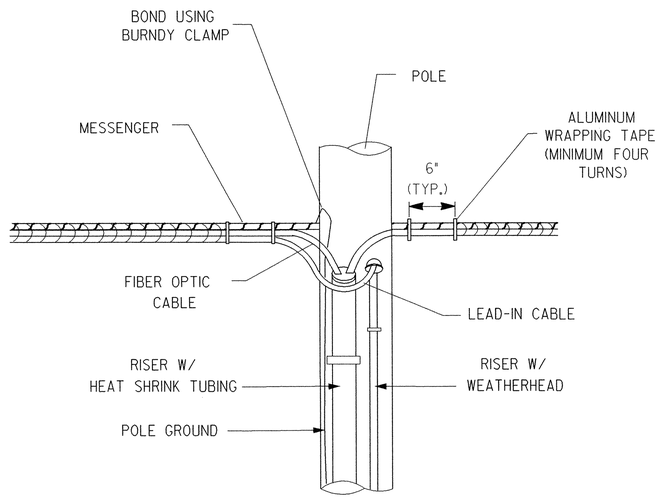

NOTE

1. USE WEATHERHEAD FOR COPPER CABLES. USE HEAT SHRINK TUBING FOR FIBER OPTIC CABLE.

TYPICAL MULTIPLE RISER CONFIGURATION

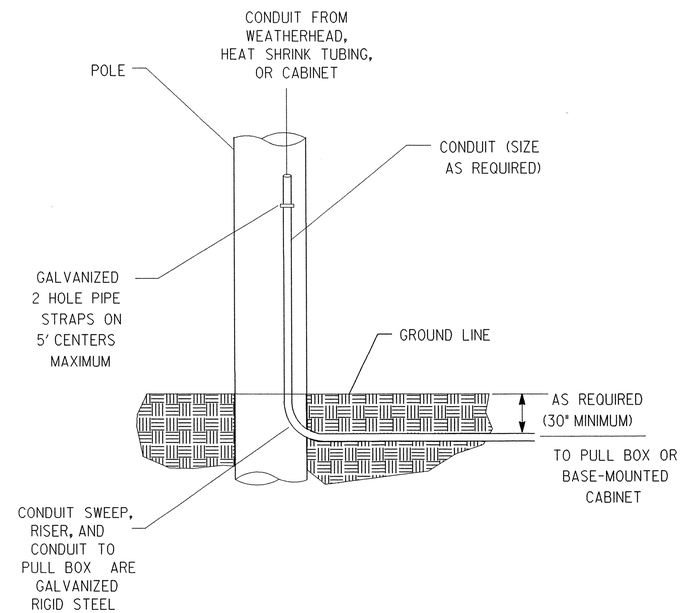

TYPICAL RISER FROM UNDERGROUND CONDUIT

PBSJ
1616 EAST MILLBROOK ROAD, SUITE 310
RALEIGH, NORTH CAROLINA 27609
(919) 876-6888

Prepared for the Offices of:
Traffic Engineering and Safety Systems Branch
Traffic Management Systems
122 N. McDowell St., Raleigh, NC 27603

NC 42 Closed Loop System
Miscellaneous Details

Division 08 | Lee County | Sanford

PLAN DATE:	July 2004	REVIEWED BY:	MR Cooney
PREPARED BY:	LM Moon	REVIEWED BY:	LMM/DLJ

SCALE	REVISIONS	INIT.	DATE
NONE			

SEAL
NORTH CAROLINA PROFESSIONAL SEAL 022516 ENGINEER LISA M. MOON

SIGNATURE 7-12-04 DATE

CADD FILENAME: Miscellaneous.dgn

12-JUL-2004 11:52
C:\PDOT\Cor\R2417BB\R2417B_80 -NC 42 CLS#Special Details#Miscellaneous.dgn
ml1563