PROJECT REFERENCE NO.	SHEET NO.
U-2408	SIG. 42

RAILROAD PREEMPTION PROGRAMMING DETAIL

(program controller as shown below)

FROM MAIN MENU PRESS 'A' (PREEMPTION), THEN '1' (STANDARD PREEMPTIONS).

```
   PREEMPTION  #1  SETTINGS (NEXT:1-10)
 INTERVAL/TIMING  |  CLEAR/DWELL PHASES
   GRN YEL  RED   |123456789101112131415 16
 1  30  4.0  2.0  |   X
 2 255  0.0  0.0  | X   X
 3   0  0.0  0.0  |
 4   0  0.0  0.0  |
 5   1  0.0  0.0  |   X
 EXIT CALLS       |
                  OPTIONS
 PRIORITY (Y/N TO SELECT) ............HIGH
 DELAY TIMER (0-255 SEC) .............0
 MIN GREEN BEFORE PRE (0= DEFAULT)....1
 PED CLEAR BEFORE PRE (0= DEFAULT)....0
 YELLOW CLEAR BEFORE PRE (0= DEFAULT).4.7
 RED CLEAR BEFORE PRE (0= DEFAULT)....2.0
 DWELL MIN TIMER (0-255 SEC) .........10
 DWELL MAX TIMER (0=OFF,1-255MIN) ....0
 DWELL HOLD-OVER TIMER (0-255) .......0
 LATCH CALL? .........................N
 LINK TO NEXT PREEMPT? ...............N
 ENABLE BACKUP PROTECTION? ...........N
 HOLD CLEAR 1 PHASES DURING DELAY? ...N
 FAST GREEN FLASH DWELL PHASES? ......N
 PED CLEARANCE THROUGH YELLOW? .......N
 INHIBIT OVERLAP GREEN EXTENSION? ....N
 SERVICE DURING SOFTWARE FLASH? ......N
 REST IN RED DURING DWELL INTERVAL? ..N
 FLASH DWELL INTERVAL? ...............N
 ALLOW PEDS IN DWELL INTERVAL? .......N
 RE-TIME DWELL INTERVAL? .............N
 OVERLAPS:                | ABCDEFGHIJKLMNOP
 DWELL INT FLASH YELLOW   |
 OMIT OVERLAPS:           | X
```

RAILROAD PREEMPTION WIRING DETAIL

(wire as shown below)

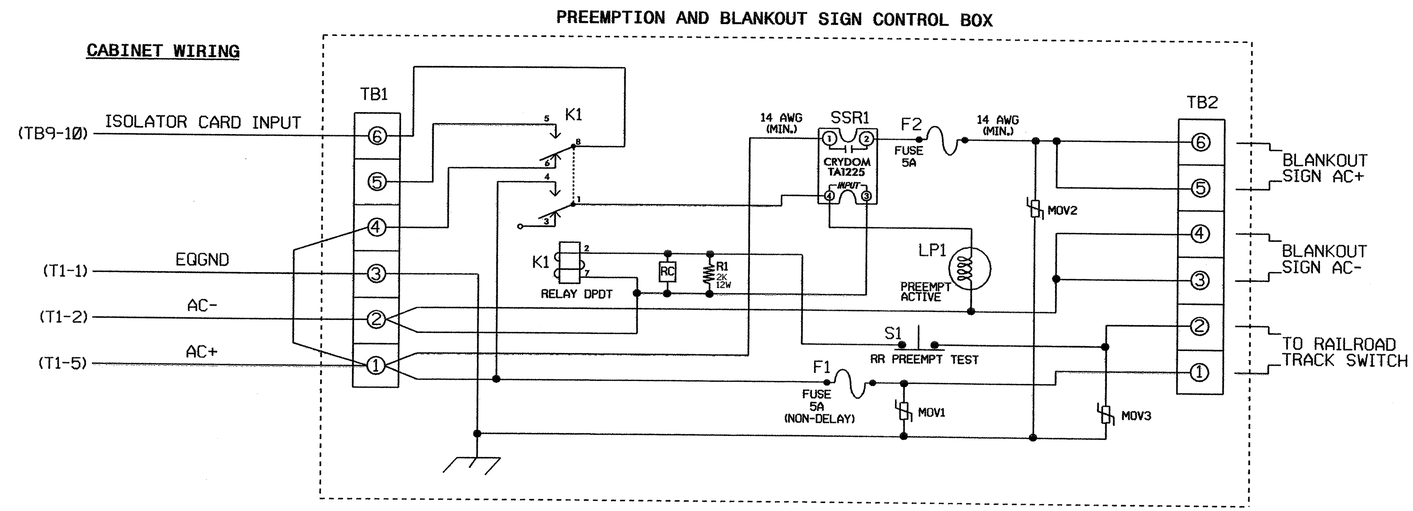

NOTES

1. RELAY K1 IS SHOWN IN THE ENERGIZED (PREEMPT NOT ACTIVE) NORMAL OPERATION STATE.
2. RELAY K1 IS A DPDT WITH 120VAC COIL. POTTER & BRUMFIELD KRP11AG WITH OCTAL BASE OR APPROVED EQUIVALENT.
3. RELAY SSR1 IS A SPST (NORMALLY OPEN) SOLID STATE RELAY WITH AC INPUT AND AC (25 AMP) OUTPUT. CRYDOM TA1225 OR APPROVED EQUIVALENT.
4. AC ISOLATOR CARD SHALL ACTIVATE PREEMPTION UPON REMOVAL OF AC+ FROM THE INPUT (AS SHOWN ABOVE).
5. RESISTOR IS VALUED AT 2K OHM, 12 WATT. CLAROSTAT PART NO. VPR10F-2K OR APPROVED EQUIVALENT.
6. RC NETWORK IS VALUED AT .1 MICROFARAD, 100 OHM.
7. IF REPLACEMENT MOVS ARE NEEDED, GE PART NO. V150LA20A MAY BE USED.
8. PREEMPTION AND BLANKOUT SIGN CONTROL BOX IS A CONTROL TECHNOLOGIES PART NO. 2299-101 OR APPROVED EQUIVALENT.
9. IMPORTANT!! A JUMPER MUST BE ADDED BETWEEN INPUT FILE TERMINALS J14-E AND J14-K IF NOT ALREADY PRESENT. ALSO, TERMINAL TB9-12 (ON INPUT PANEL) SHALL BE CONNECTED TO AC NEUTRAL (JUMPER MAY HAVE TO BE ADDED).

FRONT VIEW

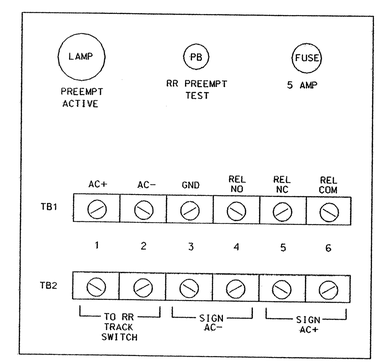

THIS ELECTRICAL DETAIL IS FOR
THE SIGNAL DESIGN: 12-0155T2
DESIGNED: 10/30/03
SEALED: 08/09/04
REVISED:

SIGNAL UPGRADE - TEMPORARY DESIGN 2 - SHEET 2 OF 2

ELECTRICAL AND PROGRAMMING DETAILS FOR:

Prepared in the Offices of:

Traffic Engineering and Safety Systems Branch
STATE OF NORTH CAROLINA
DEPARTMENT OF TRANSPORTATION
Signals Management Section

122 N. McDowell St., Raleigh, NC 27603

NC 274 (BESSEMER CITY ROAD)
AT
SR 1338 (NORTHWEST BLVD.)

DIVISION 12 GASTON COUNTY GASTONIA

PLAN DATE: JULY 2004 REVIEWED BY: TVA

PREPARED BY: WILLIAM HAIRSTON REVIEWED BY:

REVISIONS	INIT.	DATE

SEAL

NORTH CAROLINA PROFESSIONAL SEAL 022013 ENGINEER GEORGE C. BROWN

George C. Brown 8/13/04
SIGNATURE DATE

SIG. INVENTORY NO. 12-0155T2

10-AUG-2004 16:10
S:\Sigmgmt\TJoyce\U2408\12015S_2004xxxxe.dgn
TJoyce