PROJECT REFERENCE NO.	SHEET NO.
U-2912	UC-7
DESIGNED BY: CSG	
DRAWN BY: CSG	
CHECKED BY: JAN	
APPROVED BY: RBW	
REVISED:	

METRIC

0
SCALE
NOT TO SCALE

NORTH CAROLINA DEPARTMENT OF TRANSPORTATION

DESIGN SERVICES UNIT
PHONE:(919)250-4128
FAX:(919)250-4119

NORTH CAROLINA PROFESSIONAL SEAL 10157 ENGINEER RONALD B. WILKING
9/8/04

UTILITY CONSTRUCTION PLANS ONLY

UTILITY CONSTRUCTION

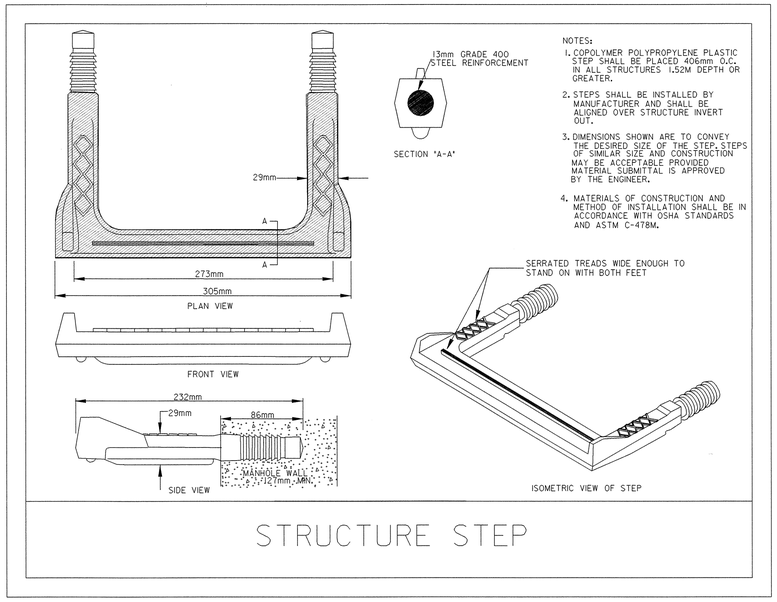

NOTES:

1. COPOLYMER POLYPROPYLENE PLASTIC STEP SHALL BE PLACED 406mm O.C. IN ALL STRUCTURES 1.52M DEPTH OR GREATER.
2. STEPS SHALL BE INSTALLED BY MANUFACTURER AND SHALL BE ALIGNED OVER STRUCTURE INVERT OUT.
3. DIMENSIONS SHOWN ARE TO CONVEY THE DESIRED SIZE OF THE STEP. STEPS OF SIMILAR SIZE AND CONSTRUCTION MAY BE ACCEPTABLE PROVIDED MATERIAL SUBMITTAL IS APPROVED BY THE ENGINEER.
4. MATERIALS OF CONSTRUCTION AND METHOD OF INSTALLATION SHALL BE IN ACCORDANCE WITH OSHA STANDARDS AND ASTM C-478M.

STRUCTURE STEP

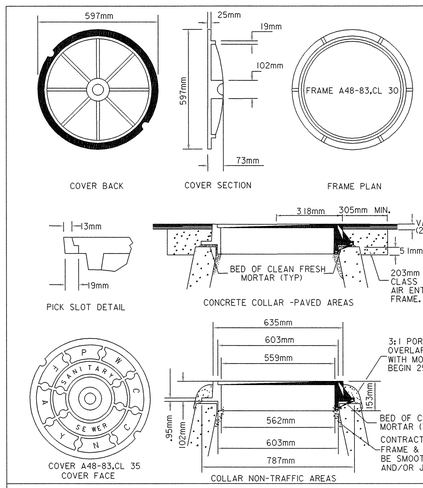

NOTES:

1. MANHOLE FRAME AND COVER SHALL BE MADE OF GRAY CAST IRON CONFORMING TO ASTM SPEC. A48-83 CL 30/35 RESPECTIVELY. MANUFACTURED BY SAME MANUFACTURER. ALL CASTINGS SHALL CONFORM TO THE SHAPE AND DIMENSIONS SHOWN. THEY SHALL BE CLEAN AND PERFECT. WITHOUT BLOW OR SAND HOLES OR DEFECTS OF ANY KIND, TENDING TO IMPAIR THEIR STRENGTH. NO PLUGGING OR STOPPING OF DEFECTIVE HOLES WILL BE PERMITTED.
2. CASTINGS SHALL BE UNPAINTED AND SHALL HAVE THE LETTERS "PWC-FAY-NC" AND "SANITARY SEWER" CAST INTO COVER. LETTERS SHALL BE RAISED AND CLEARLY VISIBLE.
3. MANHOLE RING AND COVER SHALL WITHSTAND H-20 VEHICULAR TRAFFIC. ROCKING COVERS SHALL NOT BE ACCEPTABLE.
4. MINIMUM AVERAGE WEIGHT: PLUS OR MINUS 5% RING 79 kg. COVER 61 kg. UNIT 141 kg.
5. PERFORATED COVERS WILL NOT BE ALLOWED.

MANHOLE RING AND COVER

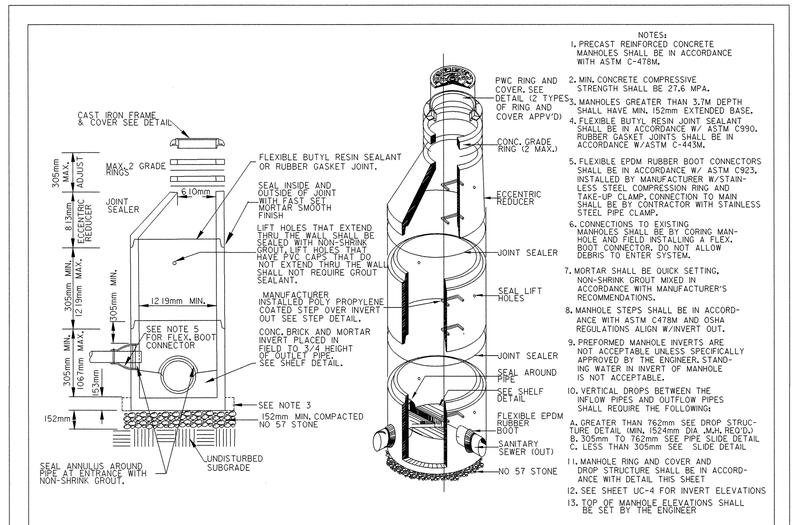

NOTES:

1. PRECAST REINFORCED CONCRETE MANHOLES SHALL BE IN ACCORDANCE WITH ASTM C-478M.
2. MIN. CONCRETE COMPRESSIVE STRENGTH SHALL BE 27.6 MPA.
3. MANHOLES GREATER THAN 1.5M DEPTH SHALL HAVE MIN. 152mm EXTENDED BASE.
4. FLEXIBLE BUTYL RESIN JOINT SEALANT SHALL BE IN ACCORDANCE W/ ASTM C990. RUBBER GASKET JOINTS SHALL BE IN ACCORDANCE W/ASTM C-443M.
5. FLEXIBLE EPDM RUBBER BOOT CONNECTORS SHALL BE IN ACCORDANCE W/ ASTM C923, INSTALLED BY MANUFACTURER W/STAINLESS STEEL COMPRESSION RING AND TAKE-UP CLAMP. CONNECTION TO MAIN SHALL BE BY CONTRACTOR WITH STAINLESS STEEL PIPE CLAMP.
6. CONNECTIONS TO EXISTING MANHOLES SHALL BE BY CORING MANHOLE AND FIELD INSTALLING A FLEX. BOOT CONNECTOR. DO NOT ALLOW DEBRIS TO ENTER SYSTEM.
7. MORTAR SHALL BE QUICK SETTING, NON-SHRINK GROUT MIXED IN ACCORDANCE WITH MANUFACTURER'S RECOMMENDATIONS.
8. MANHOLE STEPS SHALL BE IN ACCORDANCE WITH ASTM C478M AND OSHA REGULATIONS ALIGN W/INVERT OUT.
9. PREFORMED MANHOLE INVERTS ARE NOT ACCEPTABLE UNLESS SPECIFICALLY APPROVED BY THE ENGINEER. STANDING WATER IN INVERT OF MANHOLE IS NOT ACCEPTABLE.
10. VERTICAL DROPS BETWEEN THE INFLOW PIPES AND OUTFLOW PIPES SHALL REQUIRE THE FOLLOWING:
    A. GREATER THAN 762mm SEE DROP STRUCTURE DETAIL (MIN. 1524mm DIA. M.H. REQ'D.)
    B. 305mm TO 762mm SEE PIPE SLIDE DETAIL
    C. LESS THAN 305mm SEE SLIDE DETAIL
11. MANHOLE RING AND COVER AND DROP STRUCTURE SHALL BE IN ACCORDANCE WITH DETAIL THIS SHEET
12. SEE SHEET UC-4 FOR INVERT ELEVATIONS
13. TOP OF MANHOLE ELEVATIONS SHALL BE SET BY THE ENGINEER

STANDARD MANHOLE

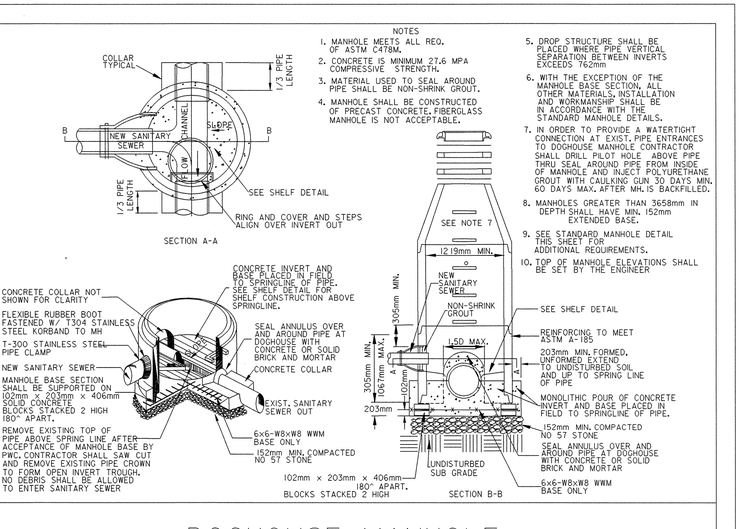

NOTES

1. MANHOLE MEETS ALL REQ. OF ASTM C478M.
2. CONCRETE IS MINIMUM 27.6 MPA COMPRESSIVE STRENGTH.
3. MATERIAL USED TO SEAL AROUND PIPE SHALL BE NON-SHRINK GROUT.
4. MANHOLE SHALL BE CONSTRUCTED OF PRECAST CONCRETE. FIBERGLASS MANHOLE IS NOT ACCEPTABLE.
5. DROP STRUCTURE SHALL BE PLACED WHERE PIPE VERTICAL SEPARATION BETWEEN INVERTS EXCEEDS 762mm
6. WITH THE EXCEPTION OF THE MANHOLE BASE SECTION, ALL OTHER MATERIALS, INSTALLATION AND WORKMANSHIP SHALL BE IN ACCORDANCE WITH THE STANDARD MANHOLE DETAILS.
7. IN ORDER TO PROVIDE A WATERTIGHT CONNECTION AT EXIST. PIPE ENTRANCES TO DOGHOUSE MANHOLE CONTRACTOR SHALL DRILL PILOT HOLE ABOVE PIPE THRU SEAL AROUND PIPE FROM INSIDE OF MANHOLE AND INJECT POLYURETHANE GROUT WITH CAULKING GUN 30 DAYS MIN. 60 DAYS MAX. AFTER MH. IS BACKFILLED.
8. MANHOLES GREATER THAN 3658mm IN DEPTH SHALL HAVE MIN. 152mm EXTENDED BASE.
9. SEE STANDARD MANHOLE DETAIL THIS SHEET FOR ADDITIONAL REQUIREMENTS.
10. TOP OF MANHOLE ELEVATIONS SHALL BE SET BY THE ENGINEER

DOGHOUSE MANHOLE

08-SEP-2004 10:38
s:\Utilities\TIP\U2912\DETAILSu2912s5.psh
DS214555
042597
DS214555 Wednesday September 08 2004 DETAILSu2912s5.m