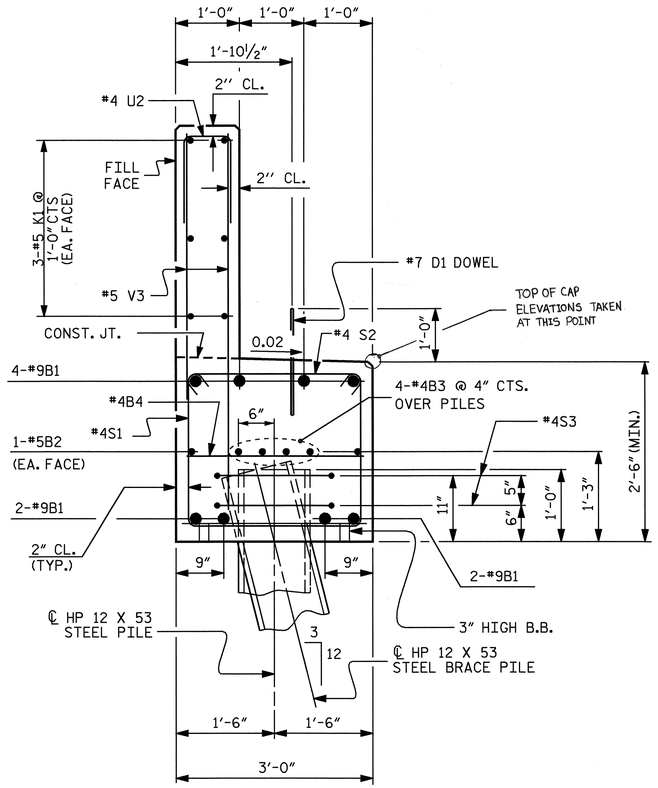

SECTION A-A

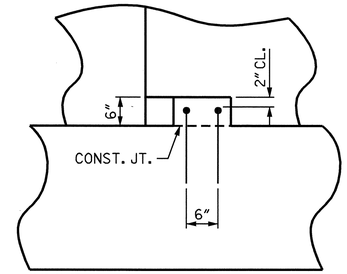

ELEVATION

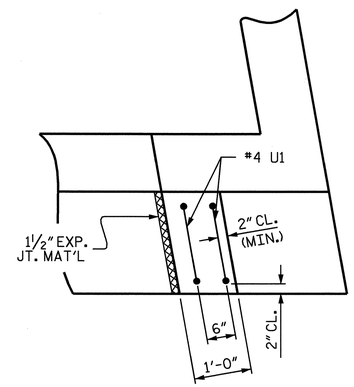

PLAN

LATERAL GUIDE DETAILS

BAR TYPES

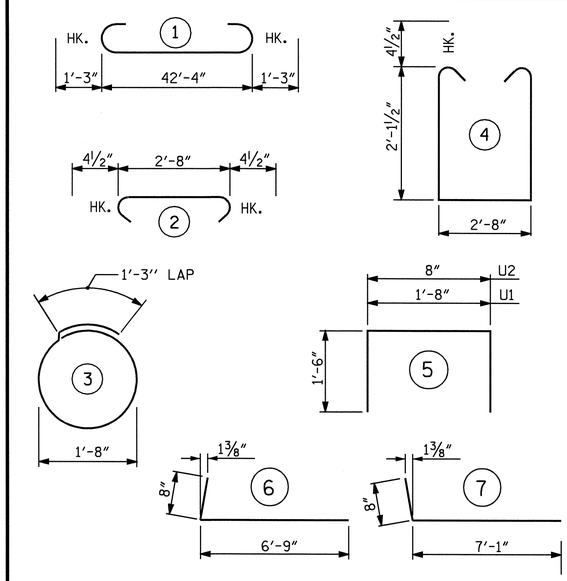

ALL BAR DIMENSIONS ARE OUT TO OUT.

BILL OF MATERIAL

BAR	NO.	SIZE	TYPE	LENGTH	WEIGHT
B1	8	9	1	44'-10"	1219
B2	2	5	STR	42'-4"	88
B3	8	4	STR	23'-5"	125
B4	11	4	STR	2'-8"	20
D1	24	7	STR	2'-0"	98
H1	14	4	6	7'-5"	69
H2	14	4	7	7'-9"	72
K1	12	4	STR	22'-1"	177
K2	8	4	STR	2'-7"	14
S1	38	4	4	7'-8"	195
S2	38	4	2	3'-5"	87
S3	20	4	3	6'-6"	87
U1	4	4	5	4'-8"	12
U2	37	4	5	3'-8"	91
V1	20	4	STR	5'-11"	79
V2	22	4	STR	6'-0"	88
V3	74	5	STR	4'-9"	367

REINFORCING STEEL 2888 LBS.

CLASS A CONCRETE BREAKDOWN

POUR 1 - CAP AND LOWER PORTION OF WINGS	13.3 C.Y.
POUR 2 - UPPER PORTION OF WINGS & BACKWALL	5.3 C.Y.
POUR 3 - LATERAL GUIDES	0.1 C.Y.
CLASS A CONCRETE TOTAL	18.7 C.Y.

HP 12 x 53 STEEL PILES

NO. 10	250 LIN. FEET

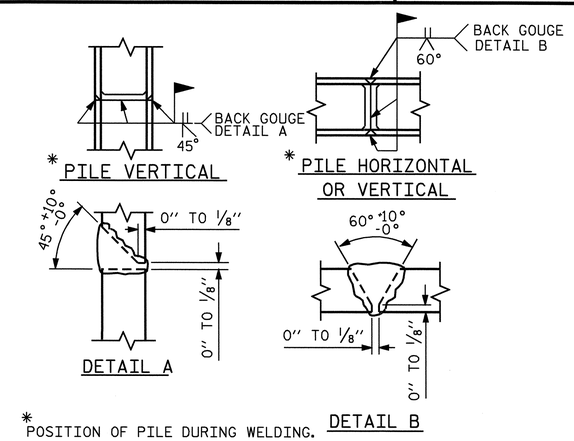

* POSITION OF PILE DURING WELDING.

PILE SPLICE DETAILS

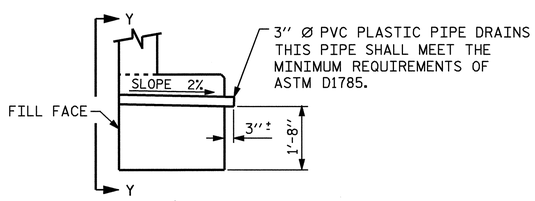

SECTION THRU CAP

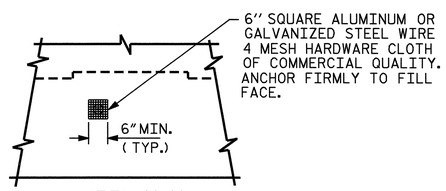

VIEW Y-Y

PIPE DRAIN DETAILS

NOTE: NO SEPARATE PAYMENT WILL BE MADE FOR FURNISHING AND INSTALLING THE PVC PLASTIC PIPE DRAINS, HARDWARE CLOTH AND FASTENERS. THE ENTIRE COST OF THIS WORK SHALL BE INCLUDED IN THE UNIT CONTRACT PRICE BID FOR THE SEVERAL PAY ITEMS.

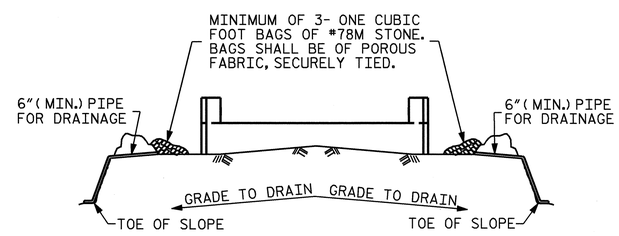

BAGGED STONE AND PIPE SHALL BE PLACED IMMEDIATELY AFTER COMPLETION OF END BENT EXCAVATION. PIPE MAY BE EITHER CONCRETE, CORRUGATED STEEL, CORRUGATED ALUMINUM ALLOY, OR CORRUGATED PLASTIC. PERFORATED PIPE WILL NOT BE ALLOWED.

BAGGED STONE SHALL REMAIN IN PLACE UNTIL THE ENGINEER DIRECTS THAT IT BE REMOVED. THE CONTRACTOR SHALL REMOVE AND DISPOSE OF SILT ACCUMULATIONS AT BAGGED STONE WHEN SO DIRECTED BY THE ENGINEER. BAGS SHALL BE REMOVED AND REPLACED WHENEVER THE ENGINEER DETERMINES THAT THEY HAVE DETERIORATED AND LOST THEIR EFFECTIVENESS.

NO SEPARATE PAYMENT WILL BE MADE FOR THIS WORK AND THE ENTIRE COST OF THIS WORK SHALL BE INCLUDED IN THE UNIT CONTRACT PRICE BID FOR THE SEVERAL PAY ITEMS.

TEMPORARY DRAINAGE AT END BENT

PROJECT NO. B-3696
ROCKINGHAM COUNTY
STATION: 17+87.50 -L-

SHEET 3 OF 3

NORTH CAROLINA PROFESSIONAL SEAL 21545 ENGINEER STEVEN L. WANCE

07/21/09

STATE OF NORTH CAROLINA
DEPARTMENT OF TRANSPORTATION
RALEIGH

SUBSTRUCTURE
END BENT 1

REVISIONS						SHEET NO.
NO.	BY:	DATE:	NO.	BY:	DATE:	S-10
1			3			TOTAL SHEETS
2			4			18

DRAWN BY : W.K. FISCHER DATE : 4/15/04
CHECKED BY : S. WANCE DATE : 5/18/04