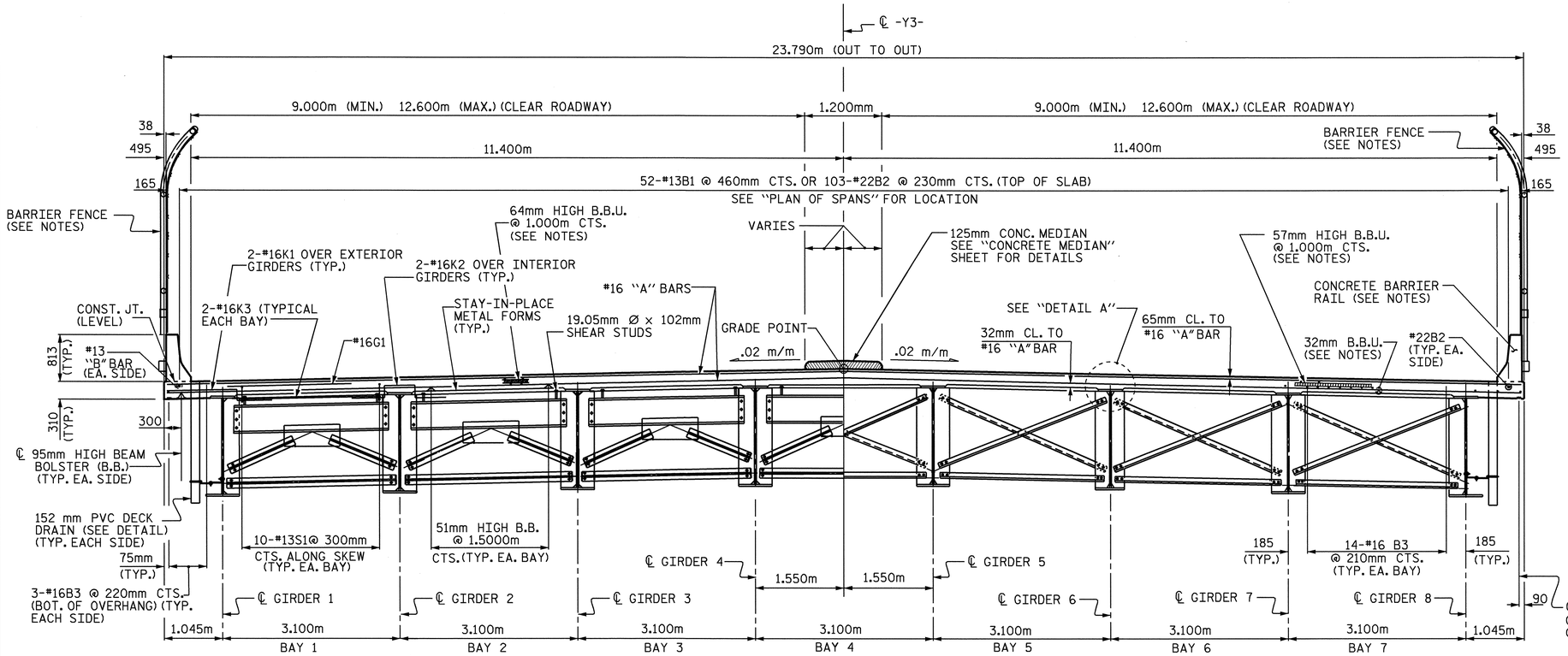

PART SECTION

SHOWING END BENT DIAPHRAGMS

PART SECTION

SHOWING INTERMEDIATE & BENT DIAPHRAGMS

NOTES

PROVIDE 32mm HIGH BEAM BOLSTERS UPPER AT 1.2m CTS. ATOP THE METAL STAY-IN-PLACE FORMS TO SUPPORT THE BOTTOM MAT OF 'A' BARS. WHEN USING REMOVABLE FORMS, PROVIDE CONTINUOUS HIGH CHAIRS FOR METAL DECK (C.H.C.M.) @ 1.2m CTS. WITH A HEIGHT TO SUPPORT THE BOTTOM MAT OF 'A' BARS A CLEAR DISTANCE OF 65mm ABOVE THE TOP OF THE REMOVABLE FORM.

FOR CONCRETE BARRIER RAIL REINFORCING STEEL AND DETAILS, SEE "CONCRETE BARRIER RAIL" SHEET.

FOR 125mm MONOLITHIC CONCRETE MEDIAN REINFORCING STEEL AND DETAILS, SEE "CONCRETE MEDIAN" SHEET.

FOR BARRIER FENCE DETAILS, SEE "BRIDGE MOUNTED CHAIN LINK FENCE" SHEET.

STRUCTURAL STEEL ERECTION IN A CONTINUOUS UNIT SHALL BE COMPLETE BEFORE FALSEWORK OR FORMS ARE PLACED ON THE UNIT.

METAL STAY-IN-PLACE FORMS SHALL NOT BE WELDED TO BEAM OR GIRDER FLANGES IN THE ZONES REQUIRING CHARPY V-NOTCH TEST. SEE STRUCTURAL STEEL DETAIL SHEETS.

PREVIOUSLY CAST CONCRETE IN A CONTINUOUS UNIT SHALL HAVE ATTAINED A MINIMUM COMPRESSIVE STRENGTH OF 20.7 MPa BEFORE ADDITIONAL CONCRETE IS CAST IN THE UNIT.

#16G1 BAR MAY BE SHIFTED SLIGHTLY, AS NECESSARY, TO CLEAR REINFORCING STEEL AND STIRRUPS.

THE CONTRACTOR MAY, WHEN NECESSARY, PROPOSE A SCHEME FOR AVOIDING INTERFERENCE BETWEEN METAL STAY-IN-PLACE FORM SUPPORTS OR FORMS AND GIRDER STIFFENERS OR CONNECTOR PLATES. THE PROPOSAL SHALL BE INDICATED, AS APPROPRIATE, ON EITHER THE STEEL WORKING DRAWINGS OR THE METAL STAY-IN- PLACE FORM WORKING DRAWINGS.

64mm HIGH B.B.U. LOCATED BETWEEN TOP & BOTTOM MATS OF REINFORCING STEEL AT THE #13 "B" BAR (TOP BAR) LOCATION ONLY, SEE PLAN OF SPANS.

57mm HIGH B.B.U. LOCATED BETWEEN TOP & BOTTOM MATS OF REINFORCING STEEL AT THE #22 "B" BAR (TOP BAR) LOCATION ONLY, SEE PLAN OF SPANS.

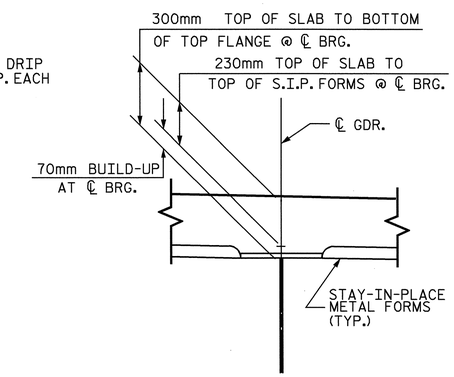

DETAIL A

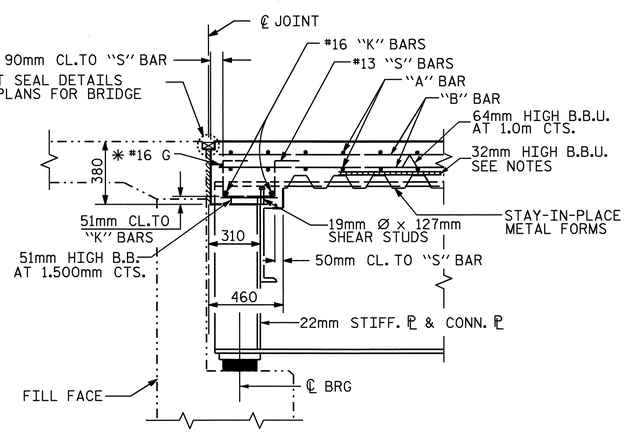

SECTION THRU END BENT DIAPHRAGM

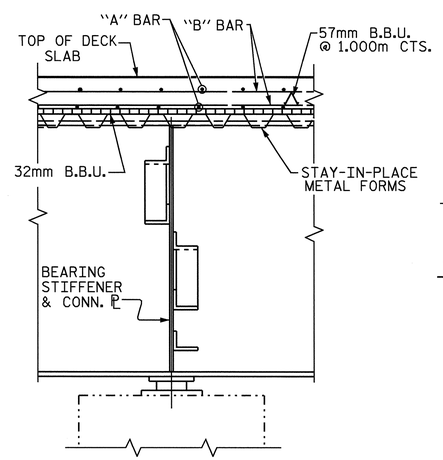

SECTION THRU BENT DIAPHRAGM

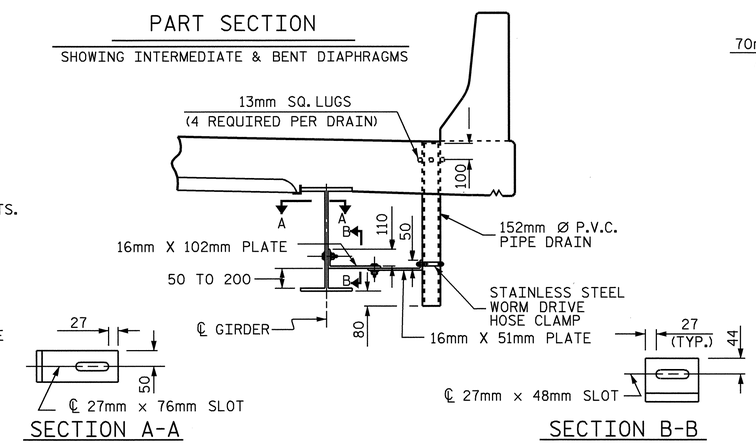

SECTION A-A

SECTION B-B

DRAIN CONNECTOR DETAIL

COUPLING IN DRAIN PIPE WILL BE PERMITTED AS APPROVED BY THE ENGINEER.

TOP OF FLOOR DRAINS TO BE SET 10mm BELOW SURFACE OF SLAB.

4- 13mm SQ. LUGS TO BE GLUED TO THE P.V.C. PLASTIC PIPE AT EQUAL SPACES AROUND THE PIPE DRAIN APPROXIMATELY 100mm FROM THE TOP OF THE PIPE.

THE 152mm DIA. PVC PIPE AND FITTINGS SHALL BE SCHEDULE 40 AND CONFORM TO ASTM D1785.

BOLT SIZE TO BE SAME AS DIAPHRAGM AND CROSSFRAME CONNECTIONS. STAINLESS STEEL WORM HOSE CLAMP SHALL BE COMMERCIAL QUALITY.

PVC DECK DRAINS SHALL BE PAINTED WITH TWO COATS OF BROWN PRIMER MEETING THE REQUIREMENTS OF ARTICLE 1080-12 OF THE STANDARD SPECIFICATIONS. EACH COAT SHALL BE 2 DRY MILS (0.050mm) THICK. DECK DRAINS SHALL BE ROUGHENED PRIOR TO PAINTING. NO SEPARATE PAYMENT SHALL BE MADE FOR PAINTING PVC DECK DRAINS AS THIS IS CONSIDERED INCIDENTAL TO THE PAY ITEM FOR REINFORCED CONCRETE DECK SLAB.

NORTH CAROLINA PROFESSIONAL SEAL 11259 ENGINEER DAVID R. ANDERSON
3/22/04

PROJECT NO. R-513C
ROBESON COUNTY
STATION: 298+57.237 -L-

STATE OF NORTH CAROLINA
DEPARTMENT OF TRANSPORTATION
RALEIGH

SUPERSTRUCTURE

TYPICAL SECTION

REVISIONS						SHEET NO.
NO.	BY:	DATE:	NO.	BY:	DATE:	S-249
1			3			TOTAL SHEETS
2			4			312

DRAWN BY : S. M. RASHIDI DATE : 8/21/01
CHECKED BY : N. Q. TRAN DATE : 10/7/02