NOTES

STIRRUPS AND "U" BARS IN CAP MAY BE SHIFTED AS NECESSARY TO CLEAR ANCHOR BOLTS.

FOR EPOXY PROTECTIVE COATING, SEE SPECIAL PROVISIONS.

PIPE DRAINS MAY BE SHIFTED SLIGHTLY AS NECESSARY TO CLEAR REINFORCING STEEL AND ANCHOR BOLTS.

BACKWALL SHALL BE PLACED BEFORE APPLYING THE EPOXY PROTECTIVE COATING.

THE TOP SURFACE AREAS OF THE END BENT CAPS SHALL BE CURED IN ACCORDANCE WITH THE STANDARD SPECIFICATIONS EXCEPT THAT THE MEMBRANE CURING COMPOUND METHOD SHALL NOT BE USED.

THE TOP SURFACE OF THE CAP EXCEPT THE BRIDGE SEAT BUILDUPS SHALL BE SLOPED TRANSVERSELY FROM THE FILL FACE TO THE BACK FACE AT THE RATE OF 2%.

THE TOTAL VOLUME OF CLASS A CONCRETE DOES NOT INCLUDE THE VOLUME OCCUPIED BY THE 305mm P/S PILES.

THE CONTRACTOR SHALL PROVIDE FOR INSTALLATION OF THE 102mm DIAMETER DRAIN PIPE THROUGH THE WING WALL AS REQUIRED FOR REINFORCED BRIDGE APPROACH FILLS, SEE THE ROADWAY PLANS. REINFORCING STEEL IN THE WING WALL MAY BE SHIFTED AS NECESSARY TO CLEAR THE DRAIN PIPE.

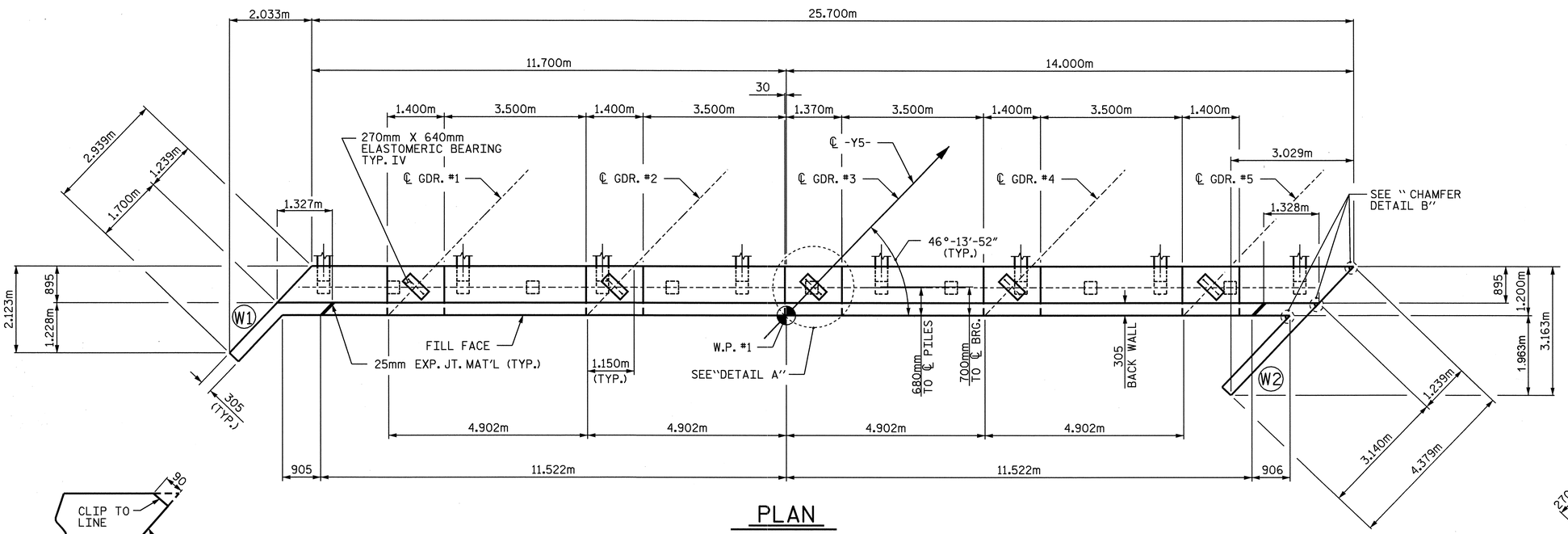

PLAN

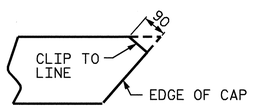

DETAIL B

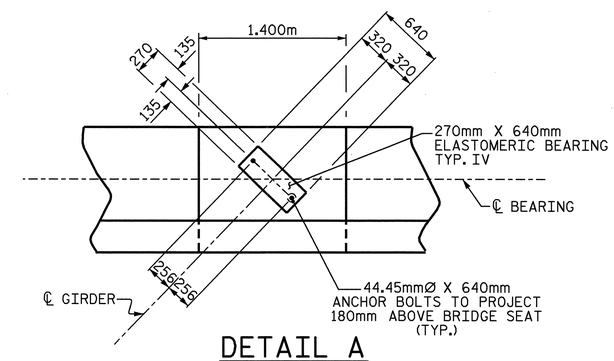

DETAIL A
(TYP. EA. GIRDER)

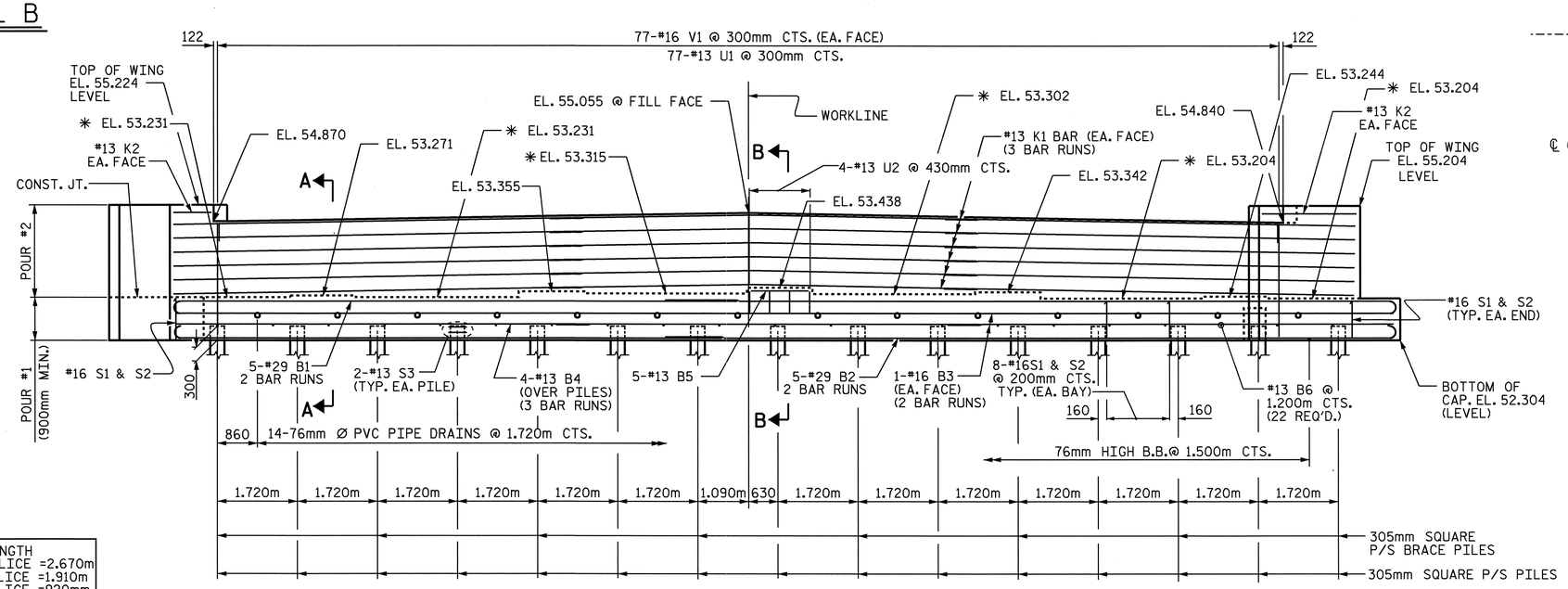

ELEVATION

✱FOR LOCATION OF ELEVATIONS BETWEEN BRIDGE SEAT BUILD-UPS, SEE "SECTION A-A & B-B", SHEET 3 OF 3.

SPLICE LENGTH
#29 B1 SPLICE =2.670m
#29 B2 SPLICE =1.910m
#16 B3 SPLICE =920mm
#13 B4 SPLICE =740mm
#13 K1 SPLICE =740mm

PROJECT NO. R-513BB
ROBESON COUNTY
STATION: 179+16.663 -L-

SHEET 1 OF 3

STATE OF NORTH CAROLINA
DEPARTMENT OF TRANSPORTATION
RALEIGH

SUBSTRUCTURE
END BENT #1

NORTH CAROLINA PROFESSIONAL SEAL 16301 ENGINEER TING-HSIUNG FANG
Ting-Hsiung Fang 3/18/04

REVISIONS						SHEET NO.
NO.	BY:	DATE:	NO.	BY:	DATE:	S-17
1			3			TOTAL SHEETS
2			4			312

DRAWN BY : S. M. RASHIDI DATE : 6/11/03
CHECKED BY : N. TRAN DATE : 1/15/04