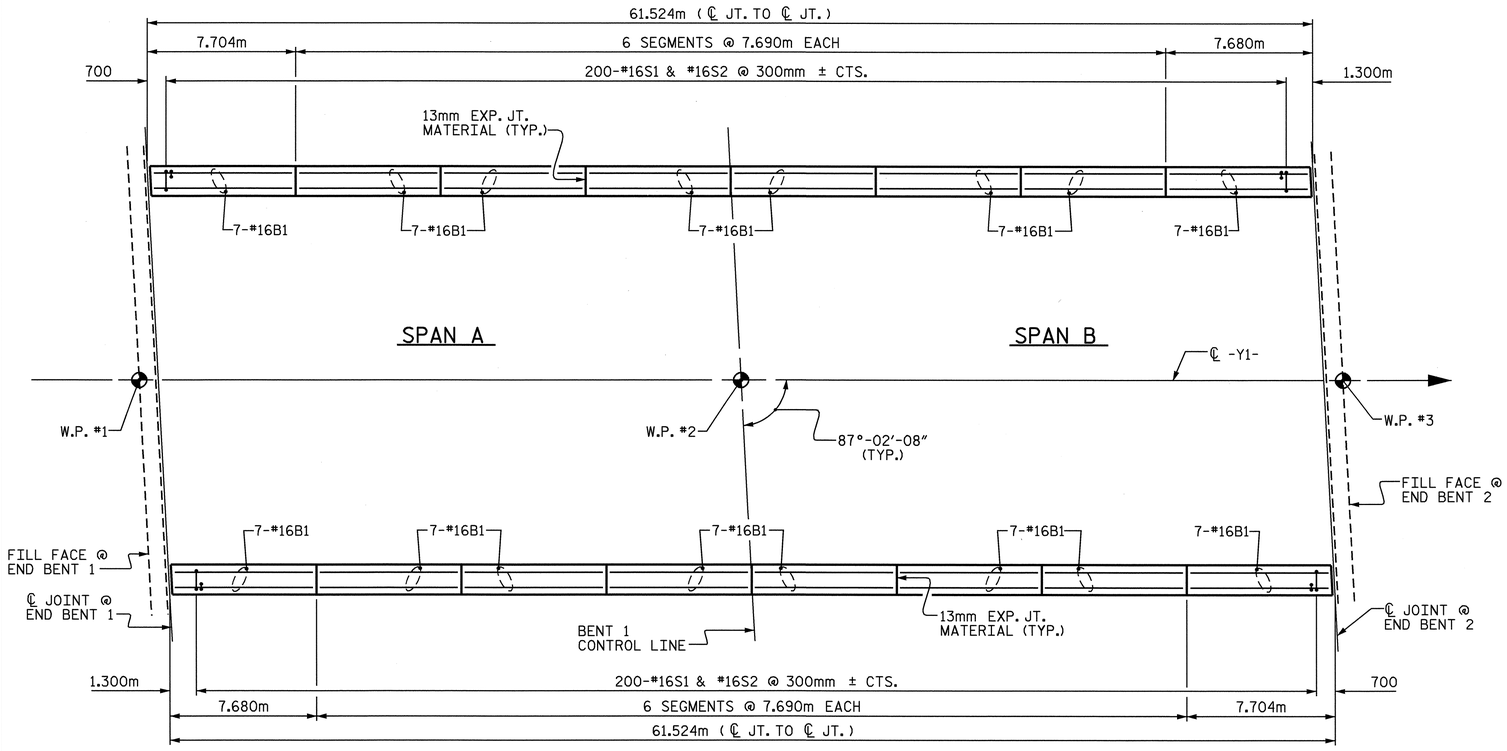

PLAN OF BARRIER RAIL

SEE PLAN FOR END OF BARRIER RAIL FOR ADDITIONAL "S" BARS NOT SHOWN IN PLAN.

NOTES

THE BARRIER RAIL IN A CONTINUOUS UNIT SHALL NOT BE CAST UNTIL ALL SLAB CONCRETE IN THAT UNIT HAS BEEN CAST AND HAS REACHED A MINIMUM COMPRESSIVE STRENGTH OF 20.7 MPa.

THE JOINT IN THE DECK SHALL BE SAWED PRIOR TO THE CASTING OF BARRIER RAIL.

ALL REINFORCING STEEL IN BARRIER RAILS SHALL BE EPOXY COATED.

THE #16S3 AND #16S4 BARS SHALL BE INSTALLED, USING AN ADHESIVE ANCHORING SYSTEM, AFTER SAWING THE JOINT. FOR ADHESIVELY ANCHORED ANCHOR BOLTS OR DOWELS, SEE SPECIAL PROVISIONS. THE YIELD LOAD FOR THE #16S3 AND #16S4 BARS IS 82.7 kN. FIELD TESTING FOR THE ADHESIVE BONDING SYSTEM IS NOT REQUIRED.

VERTICAL GROOVED CONTRACTION JOINTS, 12mm IN DEPTH, SHALL BE TOOLED IN ALL EXPOSED FACES OF THE BARRIER RAIL AND IN ACCORDANCE WITH ARTICLE 825-10(B) OF THE STANDARD SPECIFICATIONS. A JOINT SHALL BE LOCATED AT EACH THIRD POINT BETWEEN BARRIER RAIL EXPANSION JOINTS. ONLY ONE JOINT IS REQUIRED AT MIDPOINT OF BARRIER RAIL SEGMENTS LESS THAN 6.100m IN LENGTH AND NO JOINTS ARE REQUIRED FOR THOSE SEGMENTS LESS THAN 3.500m IN LENGTH.

BAR TYPES

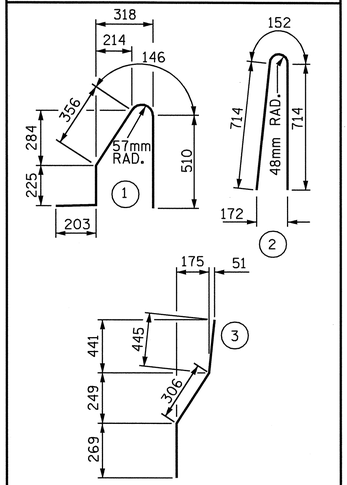

ALL BAR DIMENSIONS ARE OUT TO OUT

BILL OF MATERIAL

FOR CONCRETE BARRIER RAIL ONLY

BAR	NO.	SIZE	TYPE	LENGTH	WEIGHT
✳ B1	112	#16	STR	7580	1318
✳ S1	400	#16	1	1440	894
✳ S2	400	#16	2	1580	981
✳ S3	12	#16	3	1020	19
✳ S4	12	#16	STR	960	18

✳ EPOXY COATED REINFORCING STEEL 3230 kg

CLASS AA CONCRETE 30.9 CU. METER

CONCRETE BARRIER RAIL 123.048 METERS

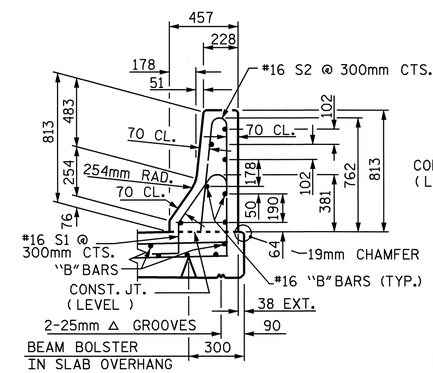

SECTION THRU RAIL

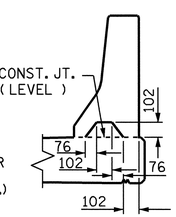

SECTION S-S

AT DAM IN OPEN JOINT
(THIS IS TO BE USED ONLY WHEN SLIP FORM IS USED)

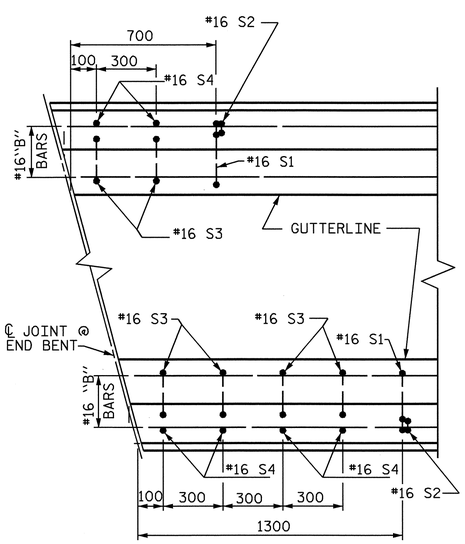

PLAN FOR END OF BARRIER RAIL

END BENT 1 SHOWN, END BENT 2 SIMILAR.

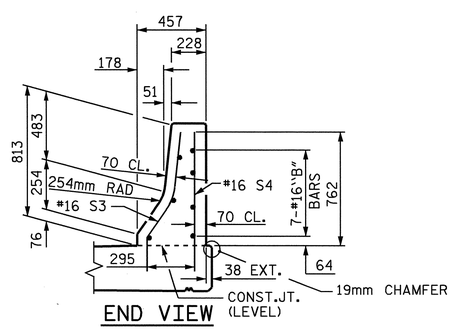

END VIEW

END OF RAIL DETAILS

FOR ADHESIVE ANCHORING AT SAWED JOINTS

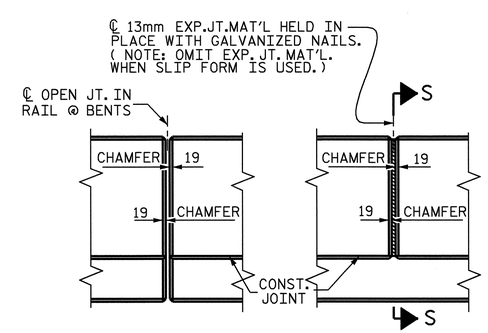

ELEVATION AT EXPANSION JOINTS

BARRIER RAIL DETAILS

PROJECT NO. R-513C

ROBESON COUNTY

STATION: 256+58.326 -L-

STATE OF NORTH CAROLINA
DEPARTMENT OF TRANSPORTATION
RALEIGH

CONCRETE BARRIER RAIL

NORTH CAROLINA PROFESSIONAL SEAL 11259 ENGINEER DAVID R. ANDERSON
3/22/04

REVISIONS						SHEET NO.
NO.	BY:	DATE:	NO.	BY:	DATE:	S-78
1			3			TOTAL SHEETS
2			4			312

DRAWN BY : T.A. WALTER DATE : 7/17/00
CHECKED BY : N.O. TRAN DATE : 10/11/02