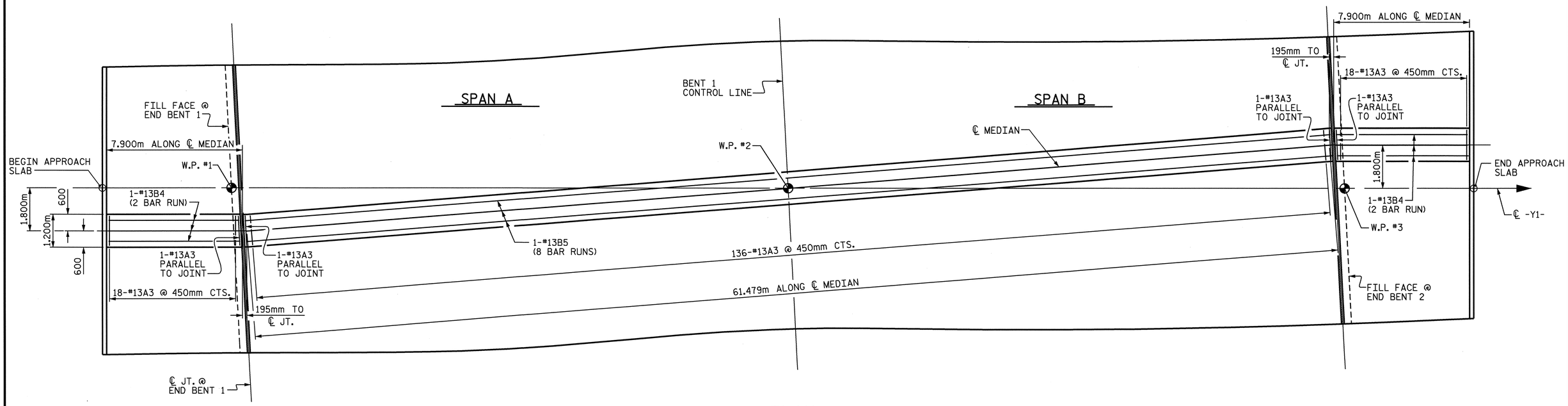

PLAN

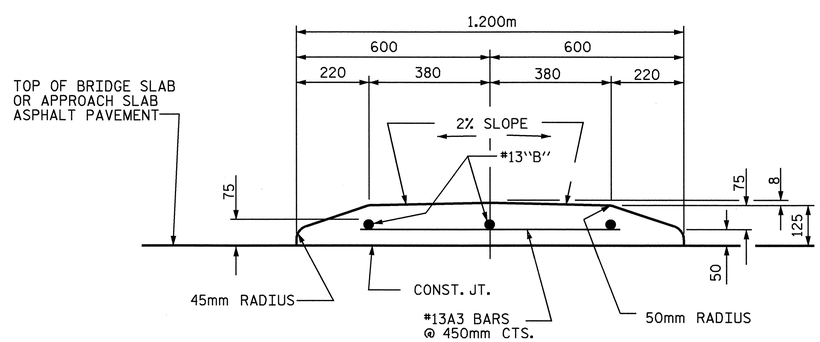

SECTION THRU CONCRETE MEDIAN

NOTE: NO SEPARATE MEASUREMENT OR PAYMENT WILL BE MADE FOR MATERIALS OR LABOR REQUIRED TO CONSTRUCT THE CONCRETE MEDIAN. THE ENTIRE COST OF THIS WORK SHALL BE INCLUDED IN THE LUMP SUM PRICE BID FOR THE REINFORCED CONCRETE DECK SLAB OR BRIDGE APPROACH SLAB.

ALL REINFORCING STEEL IN MEDIANS SHALL BE EPOXY COATED.

PROJECT NO. R-513C
ROBESON COUNTY
STATION: 256+58.326 -L-

NORTH CAROLINA PROFESSIONAL SEAL 11259 ENGINEER DAVID R. ANDERSON
3/22/04

STATE OF NORTH CAROLINA
DEPARTMENT OF TRANSPORTATION
RALEIGH

SUPERSTRUCTURE
CONCRETE MEDIAN

REVISIONS						SHEET NO.
NO.	BY:	DATE:	NO.	BY:	DATE:	5-80
1			3			TOTAL SHEETS
2			4			312

DRAWN BY : T.A. WALTER DATE : 7/20/00
CHECKED BY : N.Q. TRAN DATE : 10/14/02