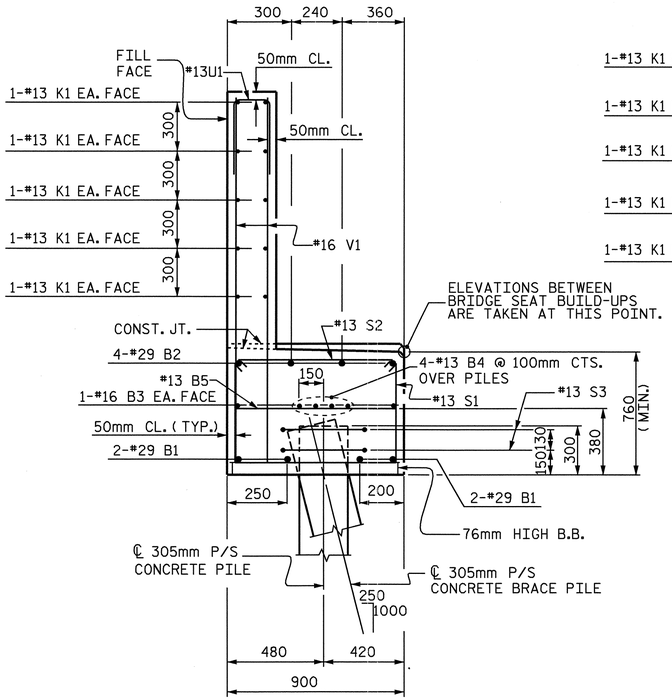

SECTION A-A

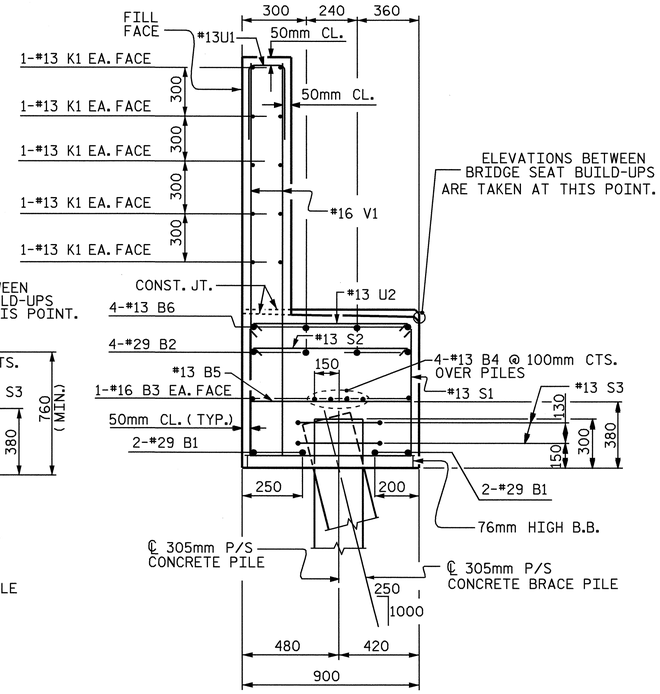

SECTION B-B

BAR TYPES

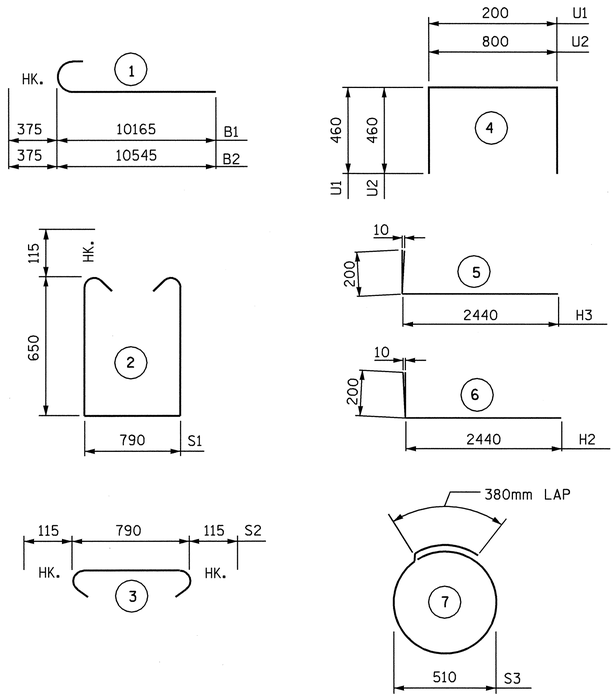

ALL BAR DIMENSIONS ARE OUT TO OUT

BILL OF MATERIAL
END BENT NO. 2

BAR	NO.	SIZE	TYPE	LENGTH	WEIGHT
B1	8	29	1	10540	427
B2	8	29	1	10920	442
B3	4	16	STR	9700	60
B4	12	13	STR	6400	76
B5	16	13	STR	800	13
B6	4	13	STR	3900	16
H1	8	13	STR	860	7
H2	20	16	5	2640	82
H3	20	16	6	2640	82
K1	30	13	STR	6660	199
S1	102	13	2	2320	235
S2	102	13	3	1020	103
S3	22	13	7	2000	44
U1	55	13	4	1120	61
U2	9	13	4	1720	15
V1	110	16	STR	2240	382
V2	48	16	STR	2600	194
REINFORCING STEEL				kg	2438

CLASS A CONCRETE BREAKDOWN

POUR 1 (CAP AND LOWER PORTION OF WINGS)	m^3	14.2
POUR 2 (BACKWALL AND UPPER PORTION OF WINGS)	m^3	12.3
TOTAL	m^3	26.5

305mm P/S CONCRETE PILES.

NO. 11 METERS 143.0

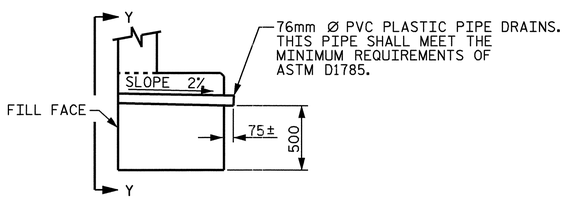

SECTION THRU CAP

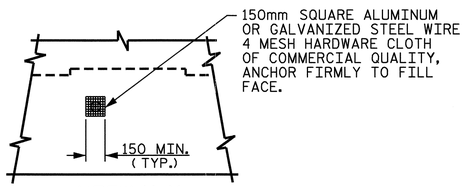

VIEW Y-Y

NOTE: NO SEPARATE PAYMENT WILL BE MADE FOR FURNISHING AND INSTALLING THE PVC PIPE DRAINS, HARDWARE CLOTH AND FASTENERS. THE ENTIRE COST OF THIS WORK SHALL BE INCLUDED IN THE UNIT CONTRACT PRICE BID FOR THE SEVERAL PAY ITEMS.

PIPE DRAIN DETAILS

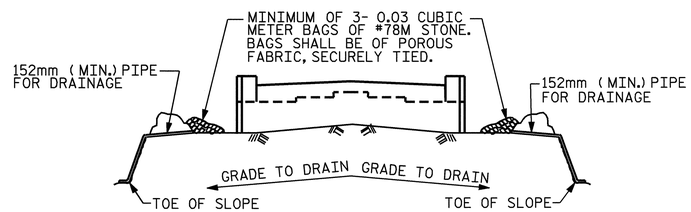

BAGGED STONE AND PIPE SHALL BE PLACED IMMEDIATELY AFTER COMPLETION OF END BENT EXCAVATION. PIPE MAY BE EITHER CONCRETE, CORRUGATED STEEL, CORRUGATED ALUMINUM ALLOY, OR CORRUGATED PLASTIC. PERFORATED PIPE WILL NOT BE ALLOWED.

BAGGED STONE SHALL REMAIN IN PLACE UNTIL THE ENGINEER DIRECTS THAT IT BE REMOVED. THE CONTRACTOR SHALL REMOVE AND DISPOSE OF SILT ACCUMULATIONS AT BAGGED STONE WHEN SO DIRECTED BY THE ENGINEER. BAGS SHALL BE REMOVED AND REPLACED WHENEVER THE ENGINEER DETERMINES THAT THEY HAVE DETERIORATED AND LOST THEIR EFFECTIVENESS.

NO SEPARATE PAYMENT WILL BE MADE FOR THIS WORK AND THE ENTIRE COST OF THIS WORK SHALL BE INCLUDED IN THE UNIT CONTRACT PRICE BID FOR THE SEVERAL PAY ITEMS.

TEMPORARY DRAINAGE AT END BENT

PROJECT NO. R-513C
ROBESON COUNTY
STATION: 256+58.326 -L-

SHEET 3 OF 3

STATE OF NORTH CAROLINA
DEPARTMENT OF TRANSPORTATION
RALEIGH

SUBSTRUCTURE
END BENT 2

NORTH CAROLINA PROFESSIONAL SEAL 11259 ENGINEER DAVID R. ANDERSON
3/22/04

REVISIONS						SHEET NO.
NO.	BY:	DATE:	NO.	BY:	DATE:	S-89
1			3			TOTAL SHEETS
2			4			312

DRAWN BY : S. M. RASHIDI DATE : 4/11/02
CHECKED BY : K. P. SADIA DATE : 5/8/02

16-JAN-2004 12:18
W:\SquadM\r0513c\stri\srashidi\Microstation\R-0513C_sd_E*_01.dgn
danderson

STR. #1