NOTES

APPROACH SLAB SHALL NOT BE CONSTRUCTED PRIOR TO COMPLETION OF THE BRIDGE DECK.

FOR REINFORCED BRIDGE APPROACH FILL INCLUDING FABRIC, IMPERMEABLE GEOMEMBRANE, 102mm Ø DRAINAGE PIPE, #78M STONE, AND SELECT MATERIAL, SEE ROADWAY PLANS.

TEMPORARY DRAINAGE AND TEMPORARY BERM AND SLOPE DRAINS WILL BE PAID FOR UNDER THE LUMP SUM PRICE FOR BRIDGE APPROACH SLAB.

AREA BETWEEN THE WINGWALL AND APPROACH SLAB SHALL BE GRADED TO DRAIN THE WATER AWAY FROM THE FILL FACE OF THE BRIDGE.

THE 150mm COMP. A.B.C. SHALL EXTEND 3m BEYOND THE END OF THE APPROACH SLAB AND 300mm OUTSIDE OF EACH EDGE OF THE SLAB.

THE CONTRACTOR MAY USE 100mm TYPE B-25.0B ASPHALT CONCRETE COURSE IN LIEU OF 150mm COMP. A.B.C. IF THIS OPTION IS USED, THE BASE COURSE SHALL EXTEND 300mm BEYOND THE END OF THE APPROACH SLAB AND THE WIDTH SHALL BE THE SAME AS THAT OF THE APPROACH SLAB.

THE CONTRACTOR MAY USE 125mm CLASS "A" CONCRETE BASE IN LIEU OF 150mm COMP. A.B.C. IF THIS OPTION IS USED, THE CONCRETE BASE SHALL EXTEND 300mm BEYOND THE END OF THE APPROACH SLAB AND THE WIDTH SHALL BE THE SAME AS THAT OF THE APPROACH SLAB. THE CONCRETE SHALL BE FINISHED TO A SMOOTH SURFACE AND A LAYER OF 13.6 kg ROOFING FELT SHALL BE PLACED BETWEEN THE CONCRETE BASE AND THE APPROACH SLAB TO PREVENT BOND. THE APPROACH SLAB SHALL NOT BE CAST UNTIL THE CONCRETE BASE HAS REACHED AN AGE OF THREE CURING DAYS.

THE JOINT SHALL BE SAWED PRIOR TO THE CASTING OF THE BARRIER RAIL.

THE COST OF THE BARRIER RAIL ON THE APPROACH SLAB SHALL BE INCLUDED IN THE LUMP SUM CONTRACT PRICE BID FOR BRIDGE APPROACH SLABS.

WITH EVAZOTE JOINT SEAL

FOR EVAZOTE JOINT SEALS, SEE SPECIAL PROVISIONS.

THE NOMINAL UNCOMPRESSED SEAL WIDTH OF THE EVAZOTE JOINT SEAL SHALL BE 64mm.

BILL OF MATERIAL
FOR ONE APPROACH SLAB (2 REQ'D)

BAR	NO.	SIZE	TYPE	LENGTH	WEIGHT
* A1	49	#16	STR	10360	788
A2	116	#13	STR	5520	636
* A101	1	#16	STR	10400	16
* A102	1	#16	STR	10140	16
* A103	1	#16	STR	9880	15
* A104	1	#16	STR	9620	15
* A105	1	#16	STR	9360	15
* A106	1	#16	STR	9080	14
* A107	1	#16	STR	8820	13
* A108	1	#16	STR	8560	13
* A109	1	#16	STR	8300	13
* A110	1	#16	STR	8020	12
* A111	1	#16	STR	7760	12
* A112	1	#16	STR	7500	12
* A113	1	#16	STR	7240	11
* A114	1	#16	STR	6960	11
* A115	1	#16	STR	6700	10
* A116	1	#16	STR	6440	10
* A117	1	#16	STR	6180	10
* A118	1	#16	STR	5900	9
* A119	1	#16	STR	5640	9
* A120	1	#16	STR	5380	8
* A121	1	#16	STR	5100	8
* A122	1	#16	STR	4840	8
* A123	1	#16	STR	4580	7
* A124	1	#16	STR	4320	7
* A125	1	#16	STR	4060	6
* A126	1	#16	STR	3780	6
* A127	1	#16	STR	3520	5
* A128	1	#16	STR	3260	5
* A129	1	#16	STR	3000	5
* A130	1	#16	STR	2720	4
* A131	1	#16	STR	2460	4
* A132	1	#16	STR	2200	3
* A133	1	#16	STR	1940	3
* A134	1	#16	STR	1660	3
* A135	1	#16	STR	1400	2
* A136	1	#16	STR	1140	2
* A137	1	#16	STR	880	1
* A138	1	#16	STR	600	1

BAR	NO.	SIZE	TYPE	LENGTH	WEIGHT
A201	1	#13	STR	5480	5
A202	1	#13	STR	5220	5
A203	1	#13	STR	4960	5
A204	1	#13	STR	4680	4
A205	1	#13	STR	4420	4
A206	1	#13	STR	4160	4
A207	1	#13	STR	3880	4
A208	1	#13	STR	3620	3
A209	1	#13	STR	3360	3
A210	1	#13	STR	3100	3
A211	1	#13	STR	2820	3
A212	1	#13	STR	2560	2
A213	1	#13	STR	2300	2
A214	1	#13	STR	2040	2
A215	1	#13	STR	1760	1
A216	1	#13	STR	1500	1
A217	1	#13	STR	1240	1
A218	1	#13	STR	980	1
A219	1	#13	STR	5680	6
A220	1	#13	STR	5420	5
A221	1	#13	STR	5140	5
A222	1	#13	STR	4880	5
A223	1	#13	STR	4620	5
A224	1	#13	STR	4360	4
A225	1	#13	STR	4100	4
A226	1	#13	STR	3820	4
A227	1	#13	STR	3560	4
A228	1	#13	STR	3300	3
A229	1	#13	STR	3040	3
A230	1	#13	STR	2760	3
A231	1	#13	STR	2500	2
A232	1	#13	STR	2240	2
A233	1	#13	STR	1980	2
A234	1	#13	STR	1700	2
A235	1	#13	STR	1440	1
A236	1	#13	STR	1180	1
A237	1	#13	STR	920	1
A238	1	#13	STR	640	1
* B101	2	#19	STR	7420	33
* B102	2	#19	STR	7580	34
* B103	2	#19	STR	7760	35

BAR	NO.	SIZE	TYPE	LENGTH	WEIGHT
* B104	2	#19	STR	7920	35
* B105	2	#19	STR	8080	36
* B106	2	#19	STR	8260	37
* B107	2	#19	STR	8440	38
* B108	2	#19	STR	8600	38
* B109	2	#19	STR	8760	39
* B110	2	#19	STR	8940	40
* B111	2	#19	STR	9100	41
* B112	2	#19	STR	9280	41
* B113	2	#19	STR	9460	42
* B114	2	#19	STR	9620	43
* B115	2	#19	STR	9780	44
* B116	2	#19	STR	9960	45
* B117	2	#19	STR	10120	45
* B118	2	#19	STR	10300	46
* B119	2	#19	STR	10460	47
* B120	2	#19	STR	10640	48
* B121	2	#19	STR	10800	48
* B122	2	#19	STR	10980	49
* B123	2	#19	STR	11140	50
* B124	2	#19	STR	11320	51
* B125	2	#19	STR	11480	51
* B126	2	#19	STR	11660	52
* B127	2	#19	STR	11820	53
* B128	2	#19	STR	12000	54
* B129	2	#19	STR	12160	54
* B130	2	#19	STR	12340	55
* B131	2	#19	STR	12500	56
* B132	2	#19	STR	12680	57
* B133	2	#19	STR	12840	57
* B134	2	#19	STR	13020	58
* B135	2	#19	STR	13180	59
B201	2	#25	STR	7580	60
B202	2	#25	STR	7740	62
B203	2	#25	STR	7920	63
B204	2	#25	STR	8080	64
B205	2	#25	STR	8240	65
B206	2	#25	STR	8420	67
B207	2	#25	STR	8600	68
B208	2	#25	STR	8760	70
B209	2	#25	STR	8920	71
B210	2	#25	STR	9100	72
B211	2	#25	STR	9260	74
B212	2	#25	STR	9440	75
B213	2	#25	STR	9620	76

BAR	NO.	SIZE	TYPE	LENGTH	WEIGHT
B214	2	#25	STR	9780	78
B215	2	#25	STR	9940	79
B216	2	#25	STR	10120	80
B217	2	#25	STR	10280	82
B218	2	#25	STR	10460	83
B219	2	#25	STR	10620	84
B220	2	#25	STR	10800	86
B221	2	#25	STR	10960	87
B222	2	#25	STR	11140	89
B223	2	#25	STR	11300	90
B224	2	#25	STR	11480	91
B225	2	#25	STR	11640	92
B226	2	#25	STR	11820	94
B227	2	#25	STR	11980	95
B228	2	#25	STR	12160	97
B229	2	#25	STR	12320	98
B230	2	#25	STR	12500	99
B231	2	#25	STR	12660	101
B232	2	#25	STR	12840	102
B232	2	#25	STR	13000	103
B234	5	#25	STR	13180	105
B235	5	#25	STR	13340	106
* G1	1	#16	STR	12000	19
* S1	58	#16	STR	980	88
* S2	42	#16	1	1220	80
* S3	20	#16	2	680	21
* B1	14	#16	STR	3580	78
* B2	1	#16	3	2160	3
* B3	1	#16	3	1860	3

REINFORCING STEEL	kg.	3666
* EPOXY COATED REINFORCING STEEL	kg.	3016
CLASS AA CONCRETE BREAKDOWN		
POUR 1 SLAB	C.M.	34.2
POUR 2 RAIL	C.M.	1.6
CLASS AA CONCRETE	C.M.	35.8

BAR TYPES

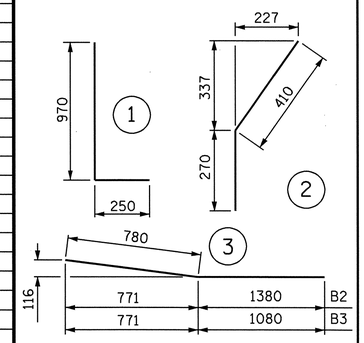

ALL BAR DIMENSIONS ARE OUT TO OUT

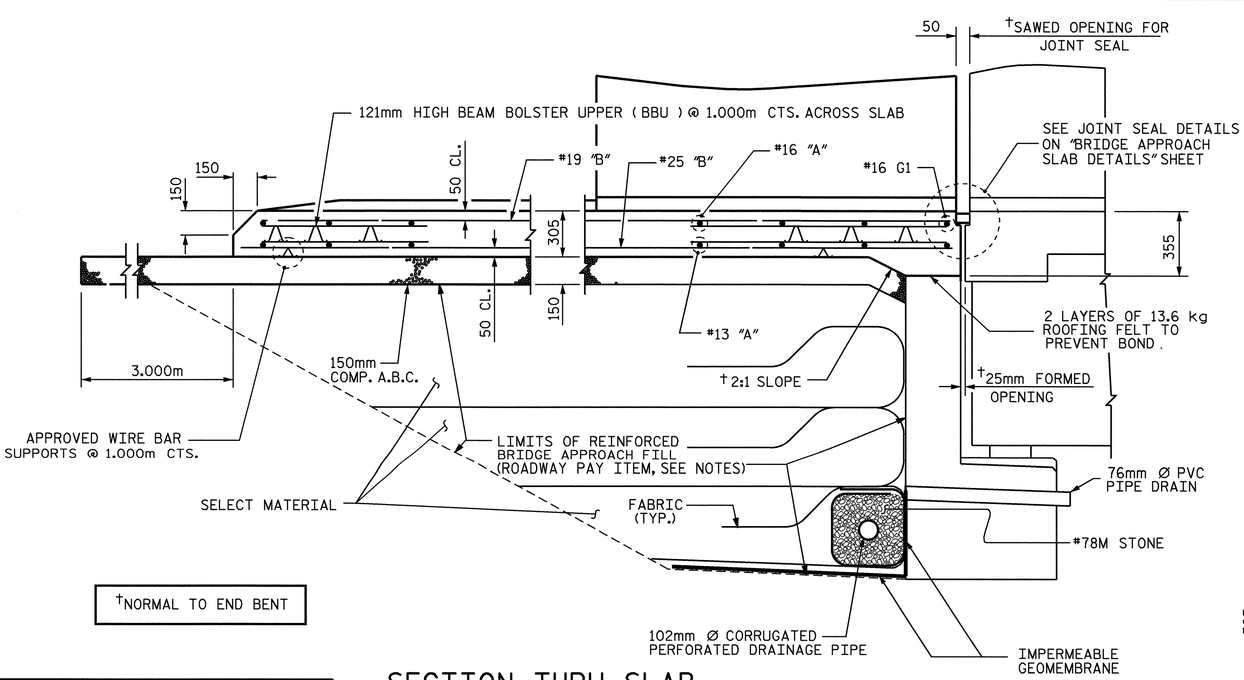

†NORMAL TO END BENT

SECTION THRU SLAB

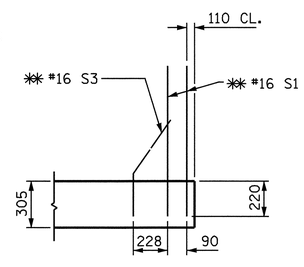

SECTION K-K

** ADHESIVELY ANCHORED

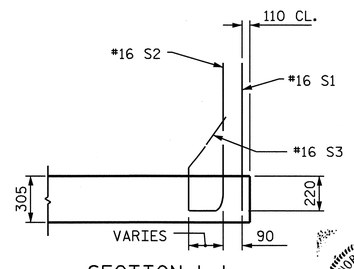

SECTION L-L

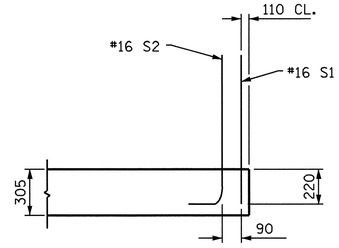

SECTION M-M

PROJECT NO. R-0513C
ROBESON COUNTY
STATION: 271+08.001-L-

SHEET 2 OF 5

STATE OF NORTH CAROLINA
DEPARTMENT OF TRANSPORTATION
RALEIGH

BRIDGE APPROACH SLAB WITH BARRIER RAIL

NORTH CAROLINA PROFESSIONAL SEAL 11259 ENGINEER DAVID R. ANDERSON
4/27/04

REVISIONS							
NO.	BY:	DATE:	NO.	BY:	DATE:		
1			3				
2			4				

SHEET NO. S-126
TOTAL SHEETS 312

DRAWN BY : R.D. MARTIN DATE : 3/16/04
CHECKED BY : W.K. FISCHER DATE : 3/30/04

06-APR-2004 12:18
W:\SquadM\r0513c\str2\wkfischer\Microstation\R0513C2.DGN
wkfischer

STR #2

REV. STD. NO. BAS2SM