PROJECT REFERENCE NO.	SHEET NO.
R-513C	2

ROADWAY DESIGN ENGINEER

NORTH CAROLINA PROFESSIONAL SEAL 12300 ENGINEER CHARLES LEE FLOWE

7/26/04

PAVEMENT DESIGN ENGINEER

NORTH CAROLINA PROFESSIONAL SEAL 22896 ENGINEER CLARK S. MORRISON

7/27/04

TGS ENGINEERS
975 WALNUT STREET, SUITE 141
CARY, NC 27511
PH (919) 319-8850

PAVEMENT SCHEDULE

C1	PROP. APPROX. 60mm ASPH. CONC. SURFACE COURSE, TYPE S9.5B, AT AN AVERAGE RATE OF 72 kg/sm IN EACH OF TWO LAYERS.
C2	PROP. APPROX. 70mm ASPH. CONC. SURFACE COURSE, TYPE S12.5D, AT AN AVERAGE RATE OF 84 kg/sm IN EACH OF TWO LAYERS.
C3	PROP. APPROX. 70mm ASPH. CONC. SURFACE COURSE, TYPE S12.5C, AT AN AVERAGE RATE OF 84 kg/sm IN EACH OF TWO LAYERS.
C4	PROP. APPROX. 70mm ASPH. CONC. SURFACE COURSE, TYPE S9.5B, AT AN AVERAGE RATE OF 84 kg/sm IN EACH OF TWO LAYERS.
C5	PROP. APPROX. 60mm ASPH. CONC. SURFACE COURSE, TYPE S12.5C, AT AN AVERAGE RATE OF 144 kg/sm.
C6	PROP. VAR. DEPTH ASPH. CONC. SURFACE COURSE, TYPE S12.5D, AT AN AVERAGE RATE OF 2.40 kg/sm PER 1mm DEPTH TO BE PLACED IN LAYERS NOT LESS THAN 35mm OR GREATER THAN 60mm DEPTH.
C7	PROP. VAR. DEPTH ASPH. CONC. SURFACE COURSE, TYPE S12.5C, AT AN AVERAGE RATE OF 2.40 kg/sm PER 1mm DEPTH TO BE PLACED IN LAYERS NOT LESS THAN 35mm OR GREATER THAN 60mm DEPTH.
C8	PROP. APPROX. 100mm ASPH. CONC. SURFACE COURSE, TYPE S12.5C, AT AN AVERAGE RATE OF 120 kg/sm IN EACH OF TWO LAYERS.
C9	PROP. VAR. DEPTH ASPH. CONC. SURFACE COURSE, TYPE S9.5B, AT AN AVERAGE RATE OF 2.40 kg/sm PER 1mm DEPTH TO BE PLACED IN LAYERS NOT LESS THAN 30mm OR GREATER THAN 40mm DEPTH.
D1	PROP. APPROX. 55mm ASPH. CONC. INTERMEDIATE COURSE, TYPE I19.0B, AT AN AVERAGE RATE OF 135 kg/sm.
D2	PROP. APPROX. 90mm ASPH. CONC. INTERMEDIATE COURSE, TYPE I19.0B, AT AN AVERAGE RATE OF 221 kg/sm.
D3	PROP. VAR. DEPTH ASPH. CONC. INTERMEDIATE COURSE, TYPE I19.0B, AT AN AVERAGE RATE OF 2.45 kg/sm PER 1mm DEPTH TO BE PLACED IN LAYERS NOT LESS THAN 55mm OR GREATER THAN 110mm DEPTH.
D4	PROP. APPROX. 90mm ASPH. CONC. INTERMEDIATE COURSE, TYPE I19.0D, AT AN AVERAGE RATE OF 221 kg/sm.
D5	PROP. VAR. DEPTH ASPH. CONC. INTERMEDIATE COURSE, TYPE I19.0C, AT AN AVERAGE RATE OF 2.45 kg/sm PER 1mm DEPTH TO BE PLACED IN LAYERS NOT LESS THAN 55mm OR GREATER THAN 110mm DEPTH.
D6	PROP. APPROX. 60mm ASPH. CONC. INTERMEDIATE COURSE, TYPE I19.0B, AT AN AVERAGE RATE OF 147 kg/sm.
D7	PROP. VAR. DEPTH ASPH. CONC. INTERMEDIATE COURSE, TYPE I19.0D, AT AN AVERAGE RATE OF 2.45 kg/sm PER 1mm DEPTH TO BE PLACED IN LAYERS NOT LESS THAN 55mm OR GREATER THAN 110mm DEPTH.
D8	PROP. APPROX. 55mm ASPH. CONC. INTERMEDIATE COURSE, TYPE I19.0C, AT AN AVERAGE RATE OF 135 kg/sm.
D9	PROP. APPROX. 110mm ASPH. CONC. INTERMEDIATE COURSE, TYPE I19.0C, AT AN AVERAGE RATE OF 269.5 kg/sm.
D10	PROP. APPROX. 90mm ASPH. CONC. INTERMEDIATE COURSE, TYPE I19.0C, AT AN AVERAGE RATE OF 220.5 kg/sm.
D11	PROP. APPROX. 70mm ASPH. CONC. INTERMEDIATE COURSE, TYPE I19.0B, AT AN AVERAGE RATE OF 171.5 kg/sm.
D12	PROP. APPROX. 65mm ASPH. CONC. INTERMEDIATE COURSE, TYPE I19.0C, AT AN AVERAGE RATE OF 159.25 kg/sm.
E1	PROP. APPROX. 75mm ASPH. CONC. BASE COURSE, TYPE B25.0C, AT AN AVERAGE RATE OF 183.75 kg/sm.
E2	PROP. APPROX. 110mm ASPH. CONC. BASE COURSE, TYPE B25.0C, AT AN AVERAGE RATE OF 269.5 kg/sm.
E3	PROP. APPROX. 120mm ASPH. CONC. BASE COURSE, TYPE B25.0C, AT AN AVERAGE RATE OF 294 kg/sm.
E4	PROP. VAR. DEPTH ASPH. CONC. BASE COURSE, TYPE B25.0C, AT AN AVERAGE RATE OF 2.45 kg/sm PER 1mm DEPTH TO BE PLACED IN LAYERS NOT LESS THAN 75mm OR GREATER THAN 140mm DEPTH.
E5	PROP. APPROX. 100mm ASPH. CONC. BASE COURSE, TYPE B25.0C, AT AN AVERAGE RATE OF 245 kg/sm.
E6	PROP. APPROX. 140mm ASPH. CONC. BASE COURSE, TYPE B25.0C, AT AN AVERAGE RATE OF 343 kg/sm.
J1	PROP. 150mm AGGREGATE BASE COURSE
J2	PROP. 200mm AGGREGATE BASE COURSE
J3	PROP. 250mm AGGREGATE BASE COURSE
J4	PROP. VAR. DEPTH AGGREGATE BASE COURSE
R1	PROP. 750mm CONCRETE CURB AND GUTTER
T	EARTH MATERIAL
U	EXISTING PAVEMENT
W1	VARIABLE DEPTH BITUMINOUS PAVEMENT (SEE WEDGING DETAIL A)
W2	VARIABLE DEPTH BITUMINOUS PAVEMENT (SEE WEDGING DETAIL B)

NOTE: ALL PAVEMENT EDGE SLOPES ARE 1:1 UNLESS SHOWN OTHERWISE

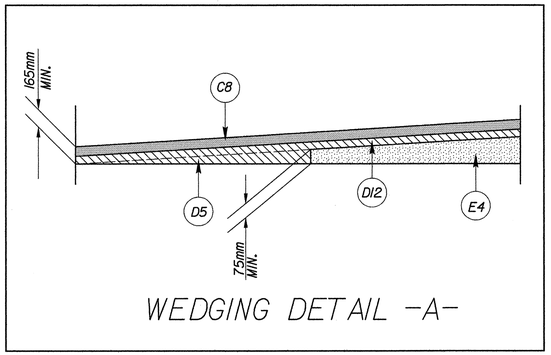

WEDGING DETAIL -A-

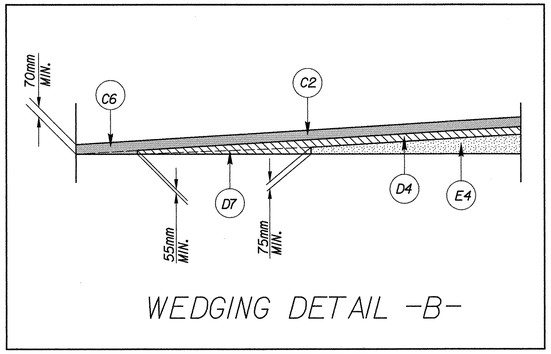

WEDGING DETAIL -B-

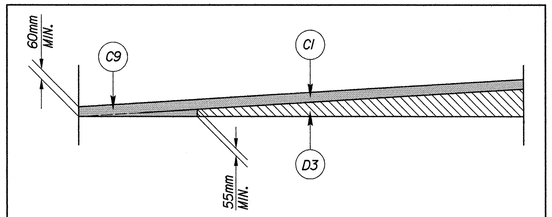

WEDGING DETAIL -C-

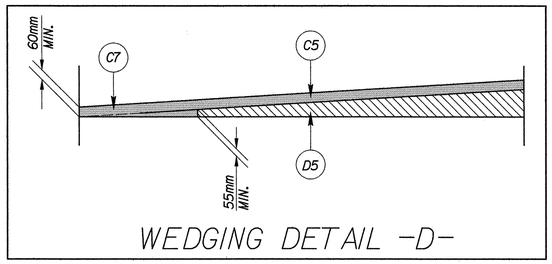

WEDGING DETAIL -D-

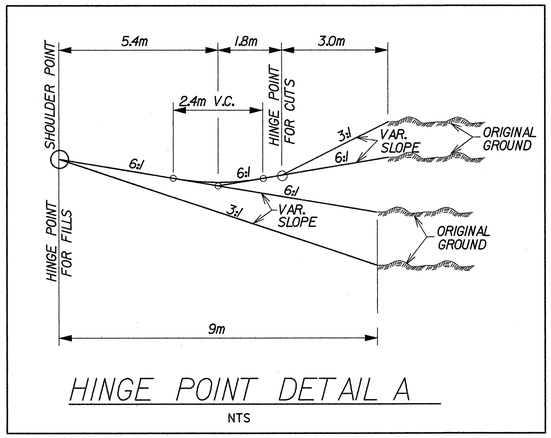

HINGE POINT DETAIL A

NTS

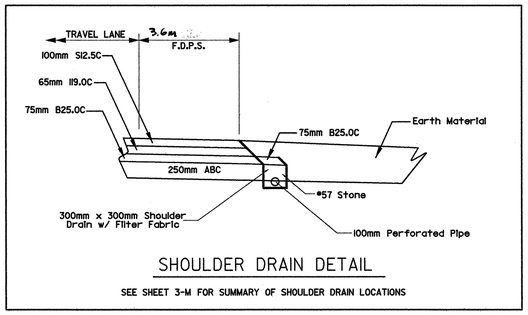

SHOULDER DRAIN DETAIL

SEE SHEET 3-M FOR SUMMARY OF SHOULDER DRAIN LOCATIONS

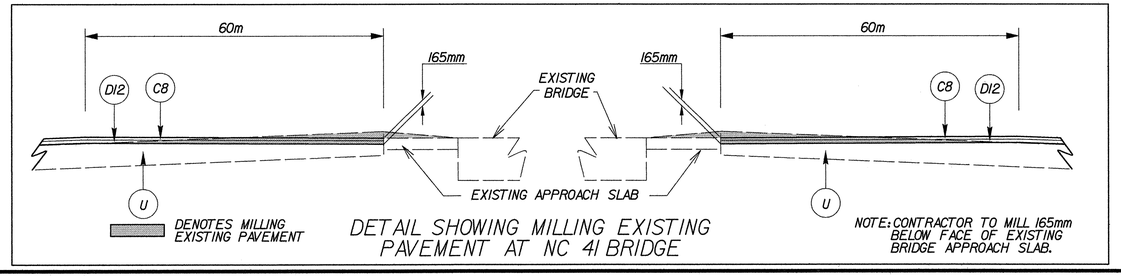

DETAIL SHOWING MILLING EXISTING PAVEMENT AT NC 41 BRIDGE

NOTE: CONTRACTOR TO MILL 165mm BELOW FACE OF EXISTING BRIDGE APPROACH SLAB.

6/16/99

SYSTIME$$ CONC$$ SYSTIME$$ CONC$$ SYSTIME$$ CONC$$

...\Title_TypDetails\R513C.TYP 07/23/2004 01:31:55 PM