PROJECT REFERENCE NO.	SHEET NO.
R-3303	2B

ROADWAY DESIGN ENGINEER

NORTH CAROLINA PROFESSIONAL SEAL 22999 ENGINEER GREG S. PURVIS 6-30-04

WANG ENGINEERING CO., INC
15200 WESTON PARKWAY
SUITE 101
CARY, NC 27513

PAVEMENT DESIGN ENGINEER

NORTH CAROLINA PROFESSIONAL SEAL 13668 ENGINEER DON-CHI CHEN 7/23/04

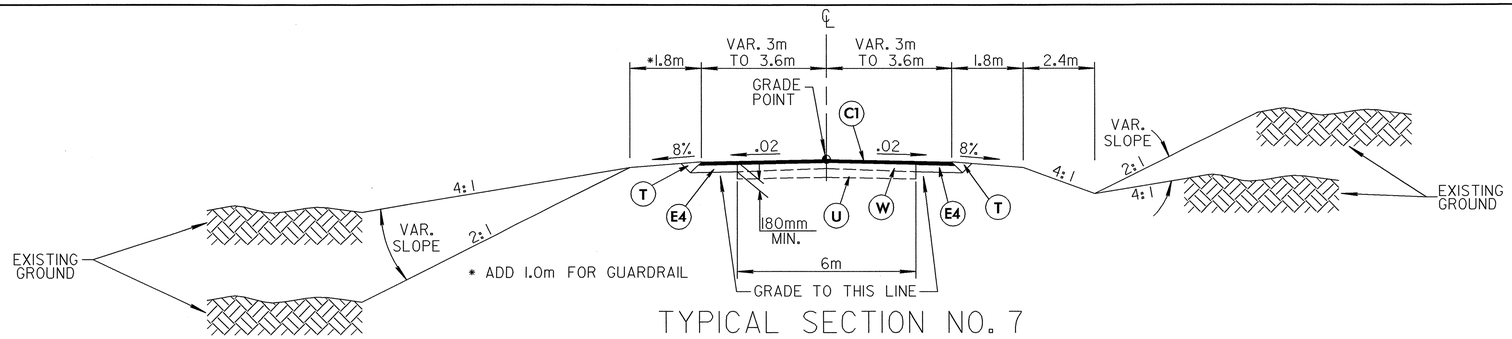

TYPICAL SECTION NO. 7

USE TYPICAL SECTION NO. 7 AS FOLLOWS

-Y4- Sta. 10+00.000 to 10+96.500

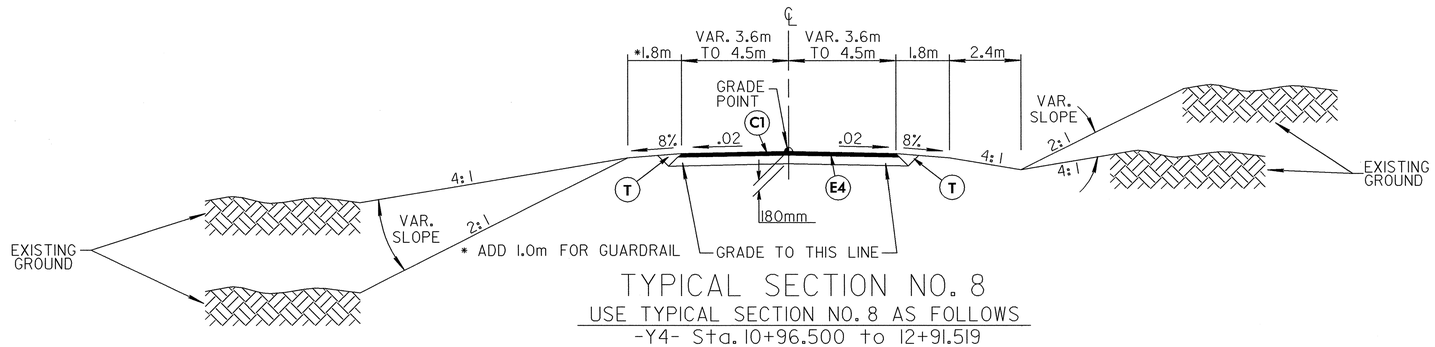

TYPICAL SECTION NO. 8

USE TYPICAL SECTION NO. 8 AS FOLLOWS

-Y4- Sta. 10+96.500 to 12+91.519

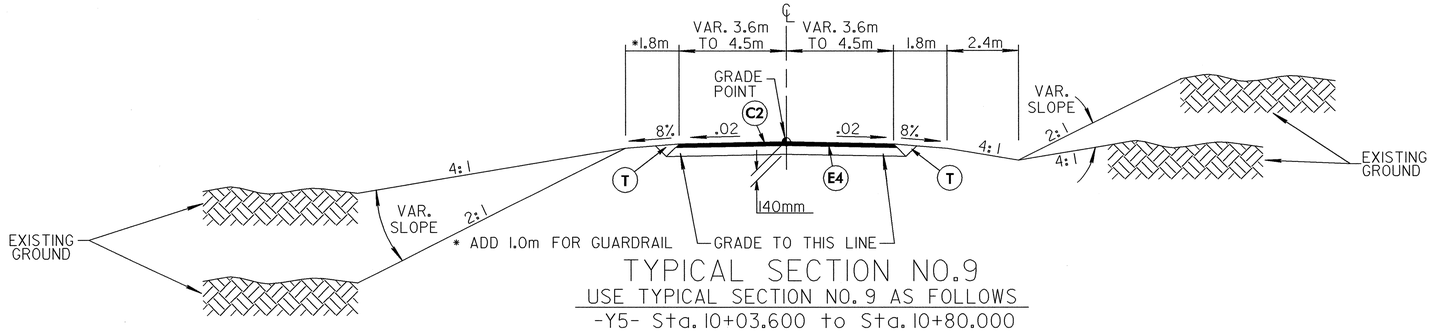

TYPICAL SECTION NO.9

USE TYPICAL SECTION NO. 9 AS FOLLOWS

-Y5- Sta. 10+03.600 to Sta. 10+80.000

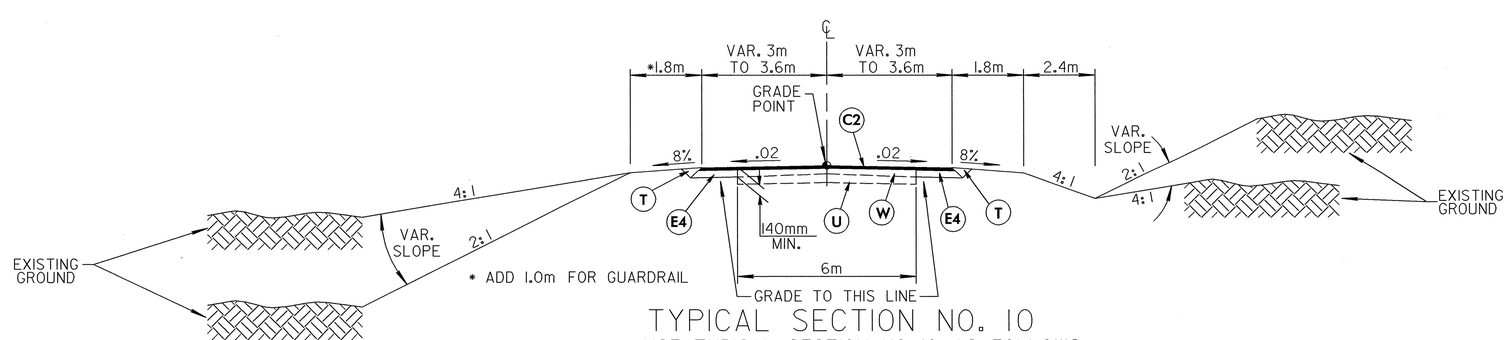

TYPICAL SECTION NO. 10

USE TYPICAL SECTION NO. 10 AS FOLLOWS

-Y5- Sta. 10+80.000 to 12+10.00

...\Roadway\Proj\r3303_rdy_typ.dgn 06/28/2004 01:13:44 PM