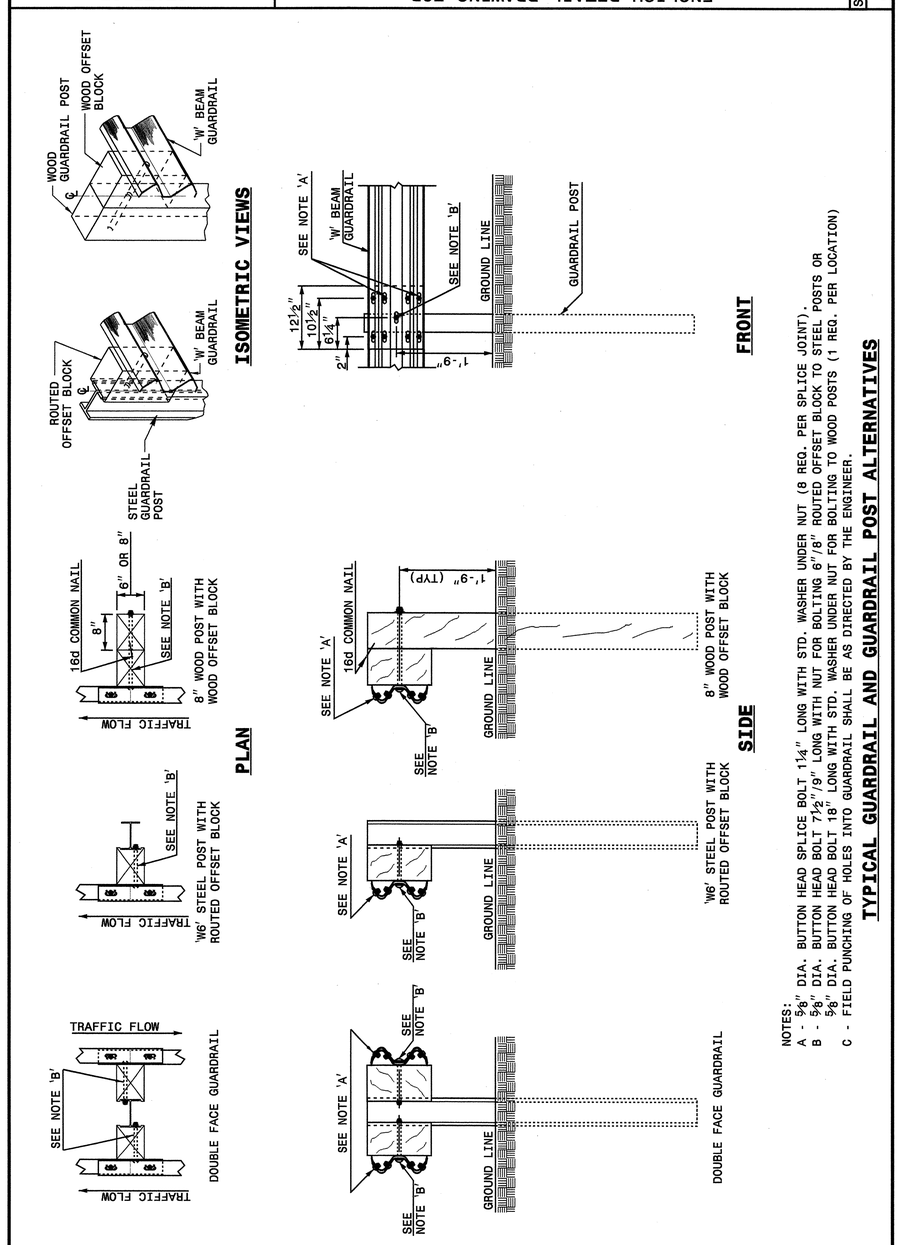

NOTES:
A - DIA. BUTTON HEAD SPLICE BOLT 1¼" LONG WITH STD. WASHER UNDER NUT (8 REQ. PER SPLICE JOINT).
B - DIA. BUTTON HEAD BOLT 7½"/9" LONG WITH NUT FOR BOLTING 6"/8" ROUTED OFFSET BLOCK TO STEEL POSTS OR DIA. BUTTON HEAD BOLT 18" LONG WITH STD. WASHER UNDER NUT FOR BOLTING TO WOOD POSTS (1 REQ. PER LOCATION)
C - FIELD PUNCHING OF HOLES INTO GUARDRAIL SHALL BE AS DIRECTED BY THE ENGINEER.

TYPICAL GUARDRAIL AND GUARDRAIL POST ALTERNATIVES

STATE OF NORTH CAROLINA DEPT. OF TRANSPORTATION DIVISION OF HIGHWAYS RALEIGH, N.C.

ENGLISH DETAIL DRAWING FOR **GUARDRAIL INSTALLATION**

SHEET 3 OF 7 **862D02**

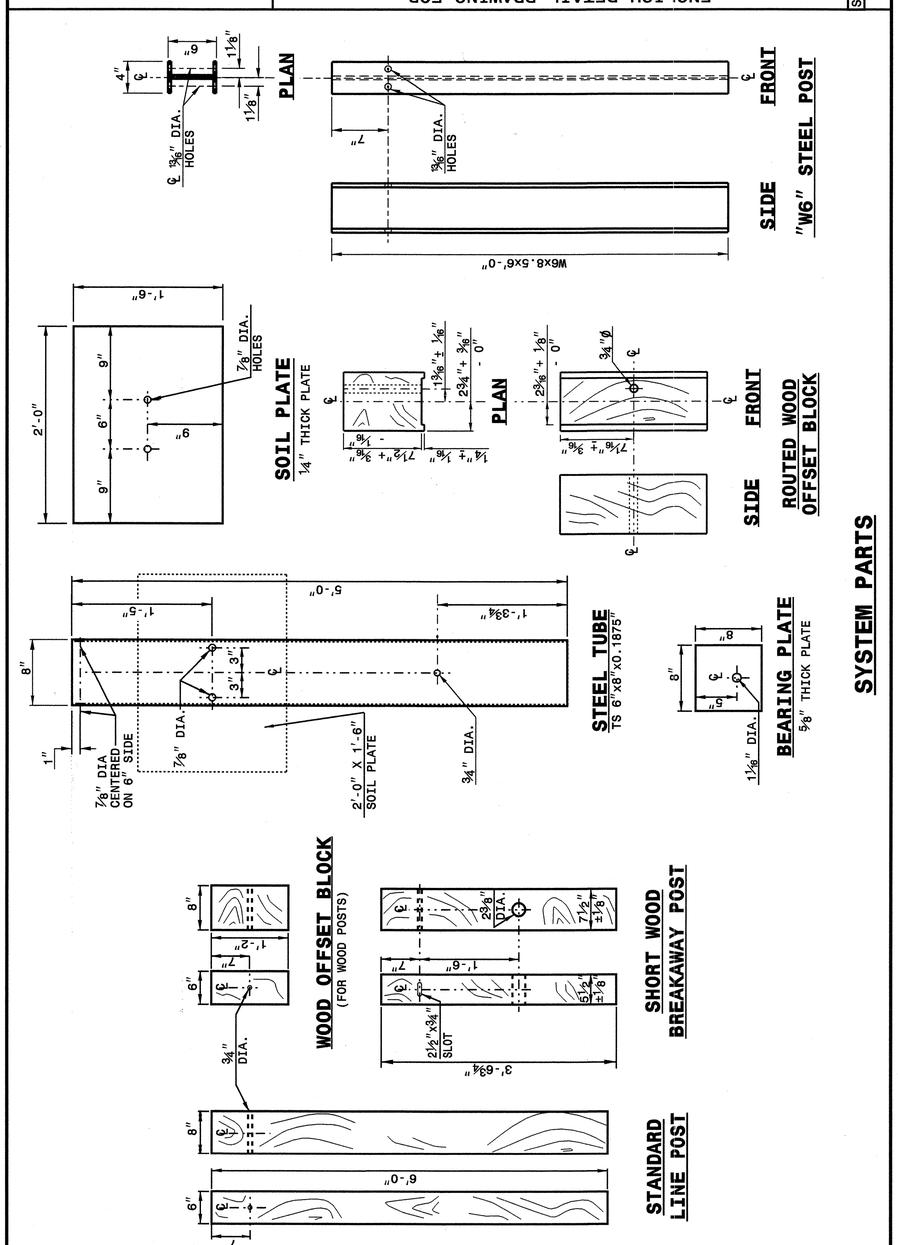

STATE OF NORTH CAROLINA DEPT. OF TRANSPORTATION DIVISION OF HIGHWAYS RALEIGH, N.C.

ENGLISH DETAIL DRAWING FOR **GUARDRAIL INSTALLATION**

SHEET 4 OF 7 **862D02**

STATE OF NORTH CAROLINA DEPT. OF TRANSPORTATION DIVISION OF HIGHWAYS RALEIGH, N.C.

ENGLISH DETAIL DRAWING FOR **GUARDRAIL INSTALLATION**

SHEET 3 OF 7 **862D02**

NORTH CAROLINA PROFESSIONAL SEAL 19761 ENGINEER CYNTHIA B. PERRY 9/9/02

DESIGN SERVICES UNIT
STANDARDS AND SPECIAL DESIGN
Office 919-250-4128 FAX 919-250-4119

SEE PLATE FOR TITLE

ORIGINAL BY: 2002 STD.862.02 DATE:
MODIFIED BY: E.E. WARD DATE: 02-09-03
CHECKED BY: DATE: 5-03
FILE SPEC.: /usr/std/02tdetail/english/86202/862d02.dgn

5/14/99

22-MAY-2003 10:17
W:\Special Details\ericward\stds\02' Stds to Special Details\english\86202\0862d02.dgn
ericward AT DS212260