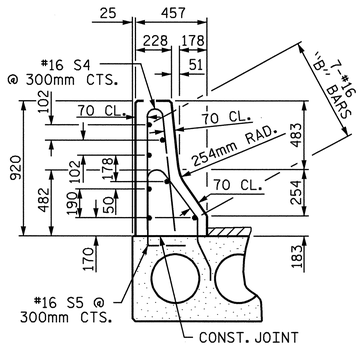

SECTION THRU RAIL
LEFT SIDE

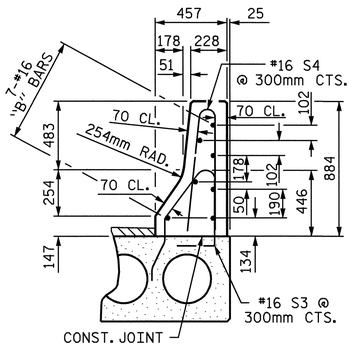

SECTION THRU RAIL
RIGHT SIDE

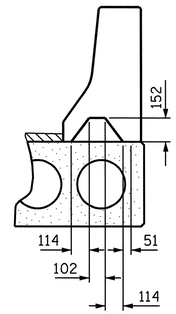

SECTION S-S
AT DAM IN OPEN JOINT
(THIS IS TO BE USED ONLY
WHEN SLIP FORM IS USED)

BAR TYPES

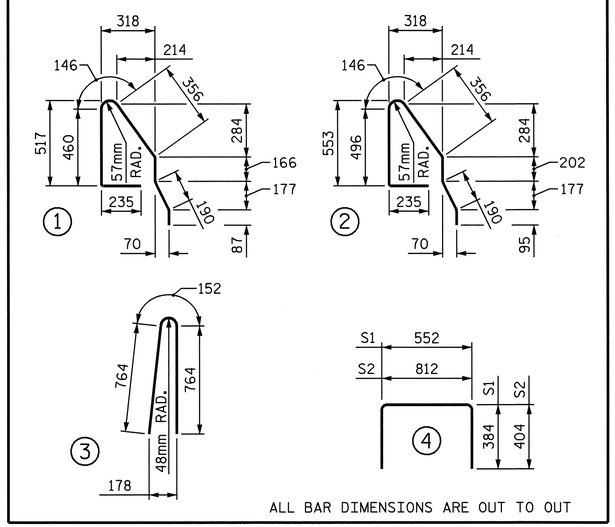

ALL BAR DIMENSIONS ARE OUT TO OUT

NOTES

ALL PRESTRESSING STRANDS SHALL BE 7-WIRE LOW-RELAXATION GRADE 270 STRANDS AND SHALL CONFORM TO AASHTO M203M EXCEPT FOR SAMPLING REQUIREMENTS WHICH SHALL BE IN ACCORDANCE WITH THE STANDARD SPECIFICATIONS.

ALL REINFORCING STEEL CAST WITH THE CORED SLAB SECTIONS SHALL BE GRADE 420 AND SHALL BE INCLUDED IN THE UNIT PRICE BID FOR PRESTRESSED CONCRETE CORED SLABS.

RECESSES FOR TRANSVERSE STRANDS SHALL BE GROUTED AFTER THE TENSIONING OF THE STRANDS.

THE 64mm Ø DOWEL HOLES AT FIXED ENDS OF SLAB SECTIONS SHALL BE FILLED WITH GROUT. THE 64mm Ø DOWEL HOLES AT EXPANSION ENDS OF SLAB SECTIONS SHALL BE FILLED WITH JOINT SEALER MATERIAL TO 38mm ABOVE THE TOP OF DOWELS AND THEN FILLED WITH GROUT.

THE JOINT SEALER MATERIAL SHALL CONFORM TO THE REQUIREMENTS OF TYPE B LOW MODULUS SILICONE SEALANT. THE 51mm Ø BACKER ROD SHALL CONFORM TO THE REQUIREMENTS OF TYPE M BOND BREAKER. THE 300mm WIDE BOND BREAKING TAPE SHALL BE CENTERED OVER THE JOINT AND CONFORM TO THE REQUIREMENTS OF TYPE N BOND BREAKER. SEE SECTION 1028 OF THE STANDARD SPECIFICATIONS.

WHEN CORED SLABS ARE CAST, A POSITIVE HOLD-DOWN SYSTEM SHALL BE EMPLOYED TO PREVENT VOIDS FROM RISING OR MOVING SIDEWAYS. THIS SYSTEM SHALL BE DESIGNED TO BE LEFT IN PLACE UNTIL THE CONCRETE HAS REACHED RELEASE STRENGTH. AT LEAST THREE WEEKS PRIOR TO CASTING CORED SLABS, THE CONTRACTOR SHALL SUBMIT TO THE ENGINEER FOR REVIEW AND COMMENT, DETAILED DRAWINGS OF THE PROPOSED HOLD-DOWN SYSTEM. IN ADDITION TO STRUCTURAL DETAILS, LOCATION AND SPACING OF THE HOLD-DOWNS SHALL BE INDICATED.

THE TRANSFER OF LOAD FROM THE ANCHORAGES TO THE CORED SLAB UNIT SHALL BE DONE WHEN THE CONCRETE HAS REACHED A COMPRESSIVE STRENGTH OF NOT LESS THAN 27.6 MPa.

ALL REINFORCING STEEL IN BARRIER RAILS SHALL BE EPOXY COATED.

PRESTRESSED STRANDS SHALL BE CUT FLUSH WITH THE CORED SLAB UNIT ENDS.

APPLY EPOXY PROTECTIVE COATING TO CORED SLAB UNIT ENDS. FOR EPOXY PROTECTIVE COATING, SEE SPECIAL PROVISIONS.

VERTICAL GROOVED CONTRACTION JOINTS, 12mm IN DEPTH, SHALL BE TOOLED IN ALL EXPOSED FACES OF THE BARRIER RAIL AND IN ACCORDANCE WITH ARTICLE 825-10(B) OF THE STANDARD SPECIFICATIONS. A VERTICAL CONTRACTION JOINT SHALL BE LOCATED AT EACH THIRD POINT BETWEEN BARRIER RAIL EXPANSION JOINTS. ONLY ONE CONTRACTION JOINT IS REQUIRED AT MIDPOINT OF BARRIER RAIL SEGMENTS LESS THAN 6.1m IN LENGTH AND NO CONTRACTION JOINTS ARE REQUIRED FOR THOSE SEGMENTS LESS THAN 3.5m IN LENGTH.

FOR ELASTOMERIC BEARINGS, SEE SPECIAL PROVISIONS.

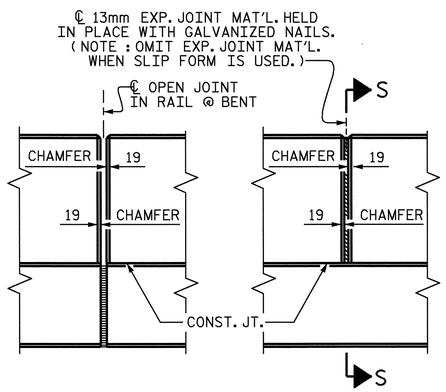

ELEVATION AT EXPANSION JOINTS

BARRIER RAIL DETAILS

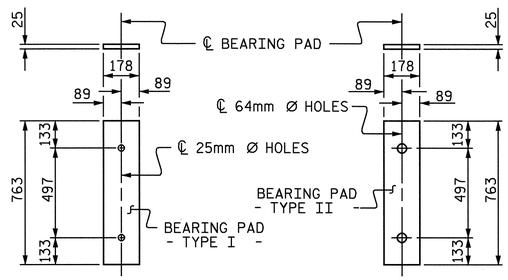

FIXED END
(TYPE I - 42 REQ'D)

EXPANSION END
(TYPE II - 42 REQ'D)

ELASTOMERIC BEARING DETAILS

BILL OF MATERIAL FOR ONE CORED SLAB UNIT

				EXTERIOR UNIT LEFT SIDE		EXTERIOR UNIT RIGHT SIDE		INTERIOR UNIT	
BAR	NUMBER	SIZE	TYPE	LENGTH	WEIGHT	LENGTH	WEIGHT	LENGTH	WEIGHT
B1	4	#13	STR	7200	29	7200	29	7200	29
S1	8	#13	4	1320	10	1320	10	1320	10
S2	90	#13	4	1620	145	1620	145	1620	145
✳ S3	47	#16	1	1640	120				
✳ S5	47	#16	2			1720	125		
REINFORCING STEEL			kg		184		184		184
✳ EPOXY COATED REINFORCING STEEL			kg		120		125		
34.5 MPa CONCRETE			CU. METERS		4.9		4.9		4.9
12.70mm Ø L.R. STRANDS			No.		20		20		20

GRADE 270 STRANDS

	12.70mm Ø L.R.
AREA (mm^2)	98.71
ULTIMATE STRENGTH (kN PER STRAND)	183.7
APPLIED PRESTRESS (kN PER STRAND)	137.8

DEAD LOAD DEFLECTION AND CAMBER

	914mm x 533mm 12.70mm Ø L.R. STRAND
CAMBER (SLAB ALONE IN PLACE)	38.760mm ↑
DEFLECTION DUE TO SUPERIMPOSED DEAD LOAD ✳✳	6.248mm ↓
FINAL CAMBER	32.512mm ↑

✳✳ INCLUDES FUTURE WEARING SURFACE

PROJECT NO. R-2514A
ONSLOW COUNTY
STATION: 182+87.400-L-MED

SHEET 5 OF 5

CORED SLABS REQUIRED

	NUMBER	LENGTH	TOTAL LENGTH
EXTERIOR C.S.	6	13.960m	83.760m
INTERIOR C.S.	36	13.960m	502.560m
TOTAL	42	13.960m	586.320m

BILL OF MATERIAL FOR CONCRETE BARRIER RAIL

BAR	BARS PER SPAN SPAN A	SPAN B	SPAN C	TOTAL NO.	SIZE	TYPE	LENGTH	WEIGHT
✳ B2	56	56	56	168	#16	STR	4020	1048
✳ S4	94	94	94	282	#16	3	1680	735
✳ EPOXY COATED REINFORCING STEEL				kg				1783
CLASS AA CONCRETE				CU. METERS			24.4	
TOTAL LENGTH OF CONCRETE BARRIER RAIL				METERS			84.000	

NORTH CAROLINA PROFESSIONAL SEAL 15825 ENGINEER BRUCE D. KLAPPENBACH
4-5-04

STATE OF NORTH CAROLINA
DEPARTMENT OF TRANSPORTATION
RALEIGH

STANDARD
914mm X 533mm
PRESTRESSED
CONCRETE CORED
SLAB UNIT
(RIGHT LANE)

REVISIONS						SHEET NO.
NO.	BY:	DATE:	NO.	BY:	DATE:	S-31
1			3			TOTAL SHEETS
2			4			46

ASSEMBLED BY : M. G. SHAIKH	DATE : 3-11-03
CHECKED BY : D. A. GLADDEN	DATE : 4-29-03
DRAWN BY : WJH 4/89	REV. 10/17/00 RWW/LES
CHECKED BY : FCJ 5/89	REV. 7/10/01 RWW/LES
	REV. 5/7/03 RWW/JTE

19-FEB-2004 09:05
w:\squadl\R2514a\Strland2\mshaikh\Microstation\R-2514A_sd_CS_02.dgn
mshaikh

STR. #2

STD. NO. PCS3SM