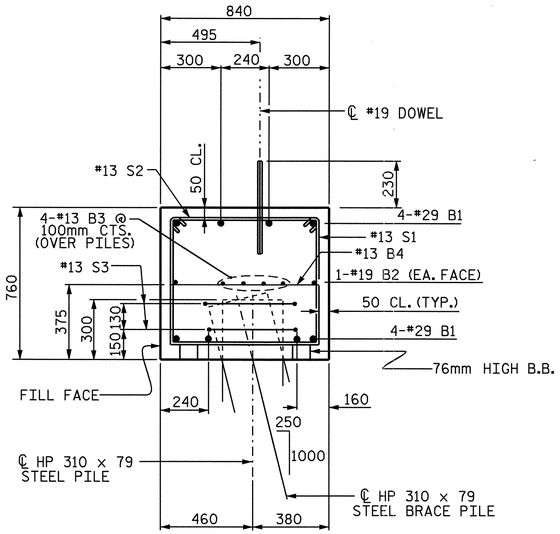

SECTION A-A

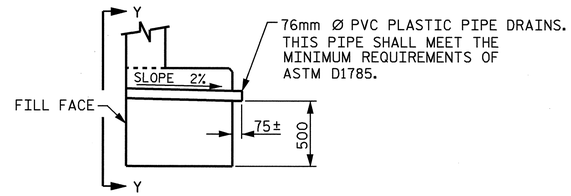

SECTION THRU CAP

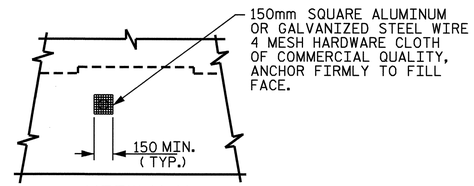

VIEW Y-Y

NOTE: NO SEPARATE PAYMENT WILL BE MADE FOR FURNISHING AND INSTALLING THE PVC PLASTIC PIPE DRAINS, HARDWARE CLOTH AND FASTENERS. THE ENTIRE COST OF THIS WORK SHALL BE INCLUDED IN THE UNIT CONTRACT PRICE BID FOR THE SEVERAL PAY ITEMS.

PIPE DRAIN DETAILS

BAR TYPES

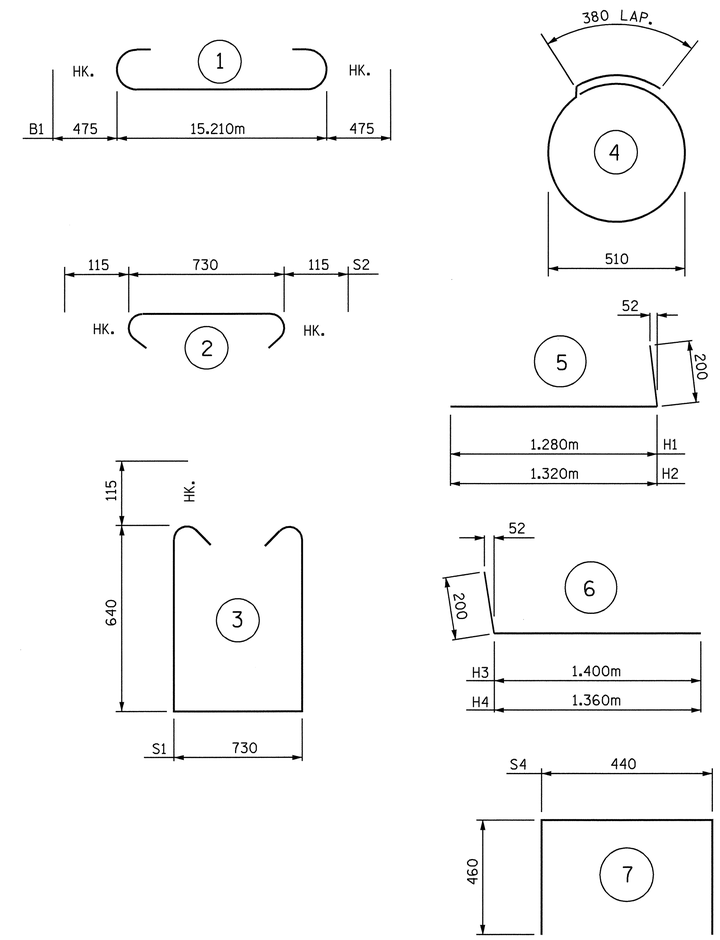

BILL OF MATERIAL

BAR	NO.	SIZE	TYPE	LENGTH	WEIGHT
B1	8	#29	1	16160	654
B2	2	#19	STR	15240	68
B3	8	#13	STR	8000	64
B4	13	#13	STR	740	10
D1	28	#19	STR	460	29
H1	5	#16	5	1480	11
H2	5	#16	5	1520	12
H3	5	#16	6	1600	12
H4	5	#16	6	1560	12
K1	8	#13	STR	900	7
S1	50	#13	3	2240	111
S2	50	#13	2	960	48
S3	14	#13	4	1980	28
S4	4	#13	7	1360	5
V1	36	#13	STR	1220	44
REINFORCING STEEL				= 1115	KG

CLASS 'A' CONCRETE BREAKDOWN

POUR #1 CAP & BOTTOM OF WINGS = 10.3 CU. M

POUR #2 TOP PART OF WINGS = 0.7 CU. M.

POUR #3 LATERAL GUIDES = 0.1 CU. M.

CLASS 'A' CONCRETE TOTAL = 11.1 CU. M.

HP 310 x 79 STEEL PILES
NO. 7 LIN. M. = 95.0m

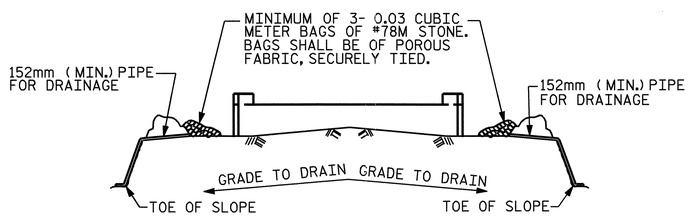

BAGGED STONE AND PIPE SHALL BE PLACED IMMEDIATELY AFTER COMPLETION OF END BENT EXCAVATION. PIPE MAY BE EITHER CONCRETE, CORRUGATED STEEL, CORRUGATED ALUMINUM ALLOY, OR CORRUGATED PLASTIC. PERFORATED PIPE WILL NOT BE ALLOWED.

BAGGED STONE SHALL REMAIN IN PLACE UNTIL THE ENGINEER DIRECTS THAT IT BE REMOVED. THE CONTRACTOR SHALL REMOVE AND DISPOSE OF SILT ACCUMULATIONS AT BAGGED STONE WHEN SO DIRECTED BY THE ENGINEER. BAGS SHALL BE REMOVED AND REPLACED WHENEVER THE ENGINEER DETERMINES THAT THEY HAVE DETERIORATED AND LOST THEIR EFFECTIVENESS.

NO SEPARATE PAYMENT WILL BE MADE FOR THIS WORK AND THE ENTIRE COST OF THIS WORK SHALL BE INCLUDED IN THE UNIT CONTRACT PRICE FOR THE SEVERAL PAY ITEMS.

TEMPORARY DRAINAGE AT END BENT

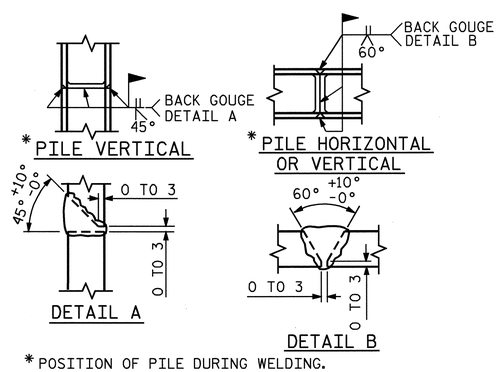

* POSITION OF PILE DURING WELDING.

PILE SPLICE DETAILS

PROJECT NO. R-2514A
ONSLOW COUNTY
STATION: 182+87.400 -L- MED.

SHEET 3 OF 3

STATE OF NORTH CAROLINA
DEPARTMENT OF TRANSPORTATION
RALEIGH

SUBSTRUCTURE END BENT #1
(RIGHT LANE)

NORTH CAROLINA PROFESSIONAL SEAL 15825 ENGINEER BRUCE D. KLAPPENBACH 4-5-04

REVISIONS						SHEET NO.
NO.	BY:	DATE:	NO.	BY:	DATE:	S-34
1			3			TOTAL SHEETS
2			4			46

DRAWN BY : J.B. WILSON DATE : 10/03
CHECKED BY : G.M. Patterson DATE : 11/03

06-JAN-2004 15:17
W:\squad1\R2514a\Str1and2\jbwilson\Microstation\R-2514A_sd_E#1_02.dgn
jbwilson

STR #2