22-MAY-2003 13:39
W:\Special Details\ericward\stds\02' Stds to Special Details\english\86202\0862d02.dgn
ericward AT DS212260

5/14/99

STATE OF NORTH CAROLINA
DEPT. OF TRANSPORTATION
DIVISION OF HIGHWAYS
RALEIGH, N.C.

ENGLISH DETAIL DRAWING FOR
GUARDRAIL INSTALLATION

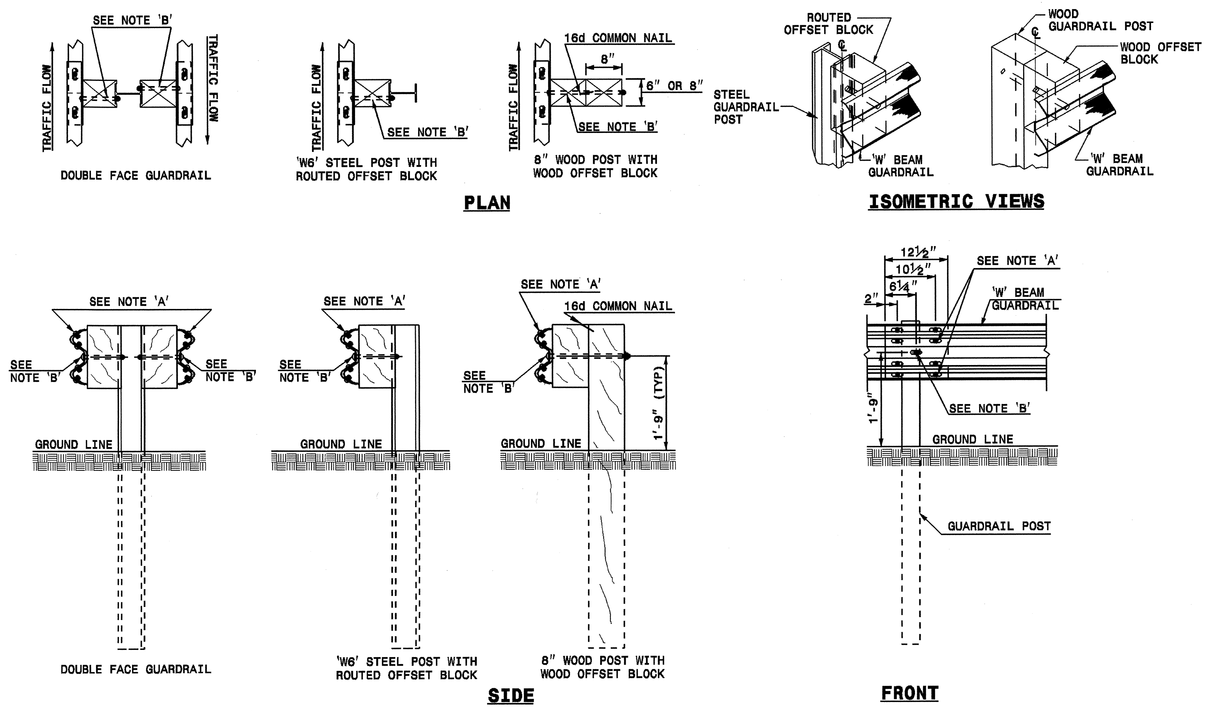

NOTES:
A - ⅝" DIA. BUTTON HEAD SPLICE BOLT 1¼" LONG WITH STD. WASHER UNDER NUT (8 REQ. PER SPLICE JOINT).
B - ⅝" DIA. BUTTON HEAD BOLT 7½"/9" LONG WITH NUT FOR BOLTING 6"/8" ROUTED OFFSET BLOCK TO STEEL POSTS OR
⅝" DIA. BUTTON HEAD BOLT 18" LONG WITH STD. WASHER UNDER NUT FOR BOLTING TO WOOD POSTS (1 REQ. PER LOCATION)
C - FIELD PUNCHING OF HOLES INTO GUARDRAIL SHALL BE AS DIRECTED BY THE ENGINEER.

TYPICAL GUARDRAIL AND GUARDRAIL POST ALTERNATIVES

SHEET 3 OF 7
862D02

STATE OF NORTH CAROLINA
DEPT. OF TRANSPORTATION
DIVISION OF HIGHWAYS
RALEIGH, N.C.

ENGLISH DETAIL DRAWING FOR
GUARDRAIL INSTALLATION

SHEET 3 OF 7
862D02

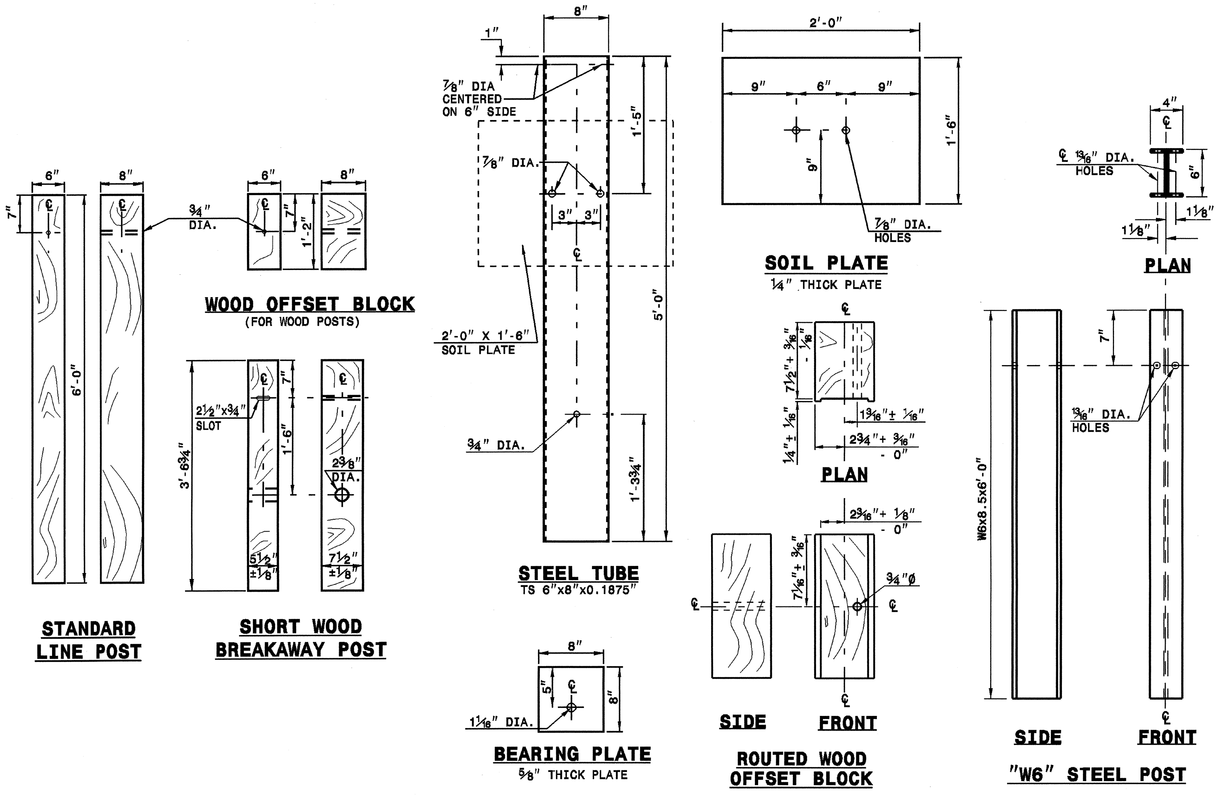

SYSTEM PARTS

SHEET 4 OF 7
862D02

STATE OF NORTH CAROLINA
DEPT. OF TRANSPORTATION
DIVISION OF HIGHWAYS
RALEIGH, N.C.

ENGLISH DETAIL DRAWING FOR
GUARDRAIL INSTALLATION

SHEET 4 OF 7
862D02

DESIGN SERVICES UNIT
STANDARDS AND SPECIAL DESIGN
Office 919-250-4128 FAX 919-250-4119

SEE PLATE FOR TITLE

ORIGINAL BY: 2002 STD. 862.02 DATE:
MODIFIED BY: E.E. WARD DATE: 02-09-03
CHECKED BY: C.B. Wood DATE: 6-10-04
FILE SPEC.: /usr/stds/02/detail/english/86202/862d02.dgn

NORTH CAROLINA PROFESSIONAL ENGINEER SEAL 19761 CYNTHIA B. PERRY

PROJECT REFERENCE NO. B-3419
SHEET NO. 2-D