CORRIDOR PUBLIC HEARING MAP
S.T.I.P. NOS. R–2721, R–2828, R–2829
STATE PROJECT NOS. 6.401078, 6.401079, 6.401080
FEDERAL AID PROJECT NOS.
STP–540(19), STP–540(20), STP–540(21)
WBS NOS. 37673.1.TA2, 35516.1.TA2, 35517.1.TA1
WAKE / JOHNSTON COUNTIES
COMPLETE 540
TRIANGLE EXPRESSWAY SOUTHEAST EXTENSION
NC 55 BYPASS TO US 64 / 264 BYPASS / I–495
SHEET 6A OF 8
NORTH CAROLINA Turnpike Authority

INSET O–G ORANGE TO GREEN

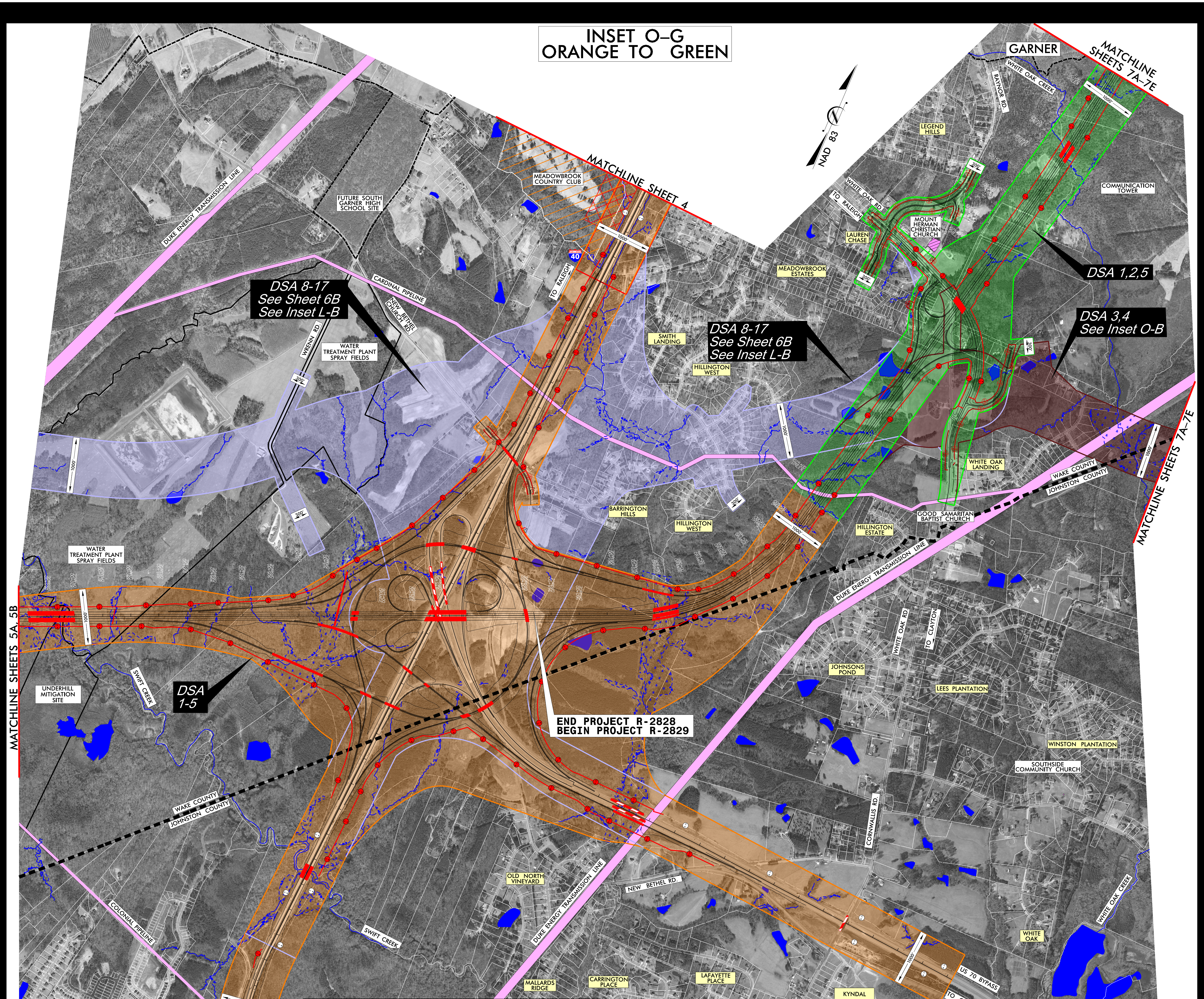
MATCHLINE SHEET 4
NAD 83
DUKE ENERGY TRANSMISSION LINE
FUTURE SOUTH GARNER HIGH SCHOOL SITE
MEADOWBROOK COUNTRY CLUB
1000'
40
TO RALEIGH
CARDINAL PIPELINE
NEW BETHEL CHURCH RD.
DSA 8-17 See Sheet 6B See Inset L-B
WRENN RD.
WATER TREATMENT PLANT SPRAY FIELDS
300'
GARNER
WHITE OAK CREEK
RAYNOR RD.
MATCHLINE SHEETS 7A–7E
LEGEND HILLS
WHITE OAK RD
TO RALEIGH
LAUREN CHASE
MOUNT HERMAN CHRISTIAN CHURCH
MEADOWBROOK ESTATES
COMMUNICATION TOWER
DSA 1,2,5
DSA 3,4 See Inset O-B
SMITH LANDING
HILLINGTON WEST
DSA 8-17 See Sheet 6B See Inset L-B
BARRINGTON HILLS
HILLINGTON WEST
HILLINGTON ESTATE
GOOD SAMARITAN BAPTIST CHURCH
WHITE OAK LANDING
WAKE COUNTY
JOHNSTON COUNTY
MATCHLINE SHEETS 7A–7E
DUKE ENERGY TRANSMISSION LINE
WATER TREATMENT PLANT SPRAY FIELDS
MATCHLINE SHEETS 5A, 5B
UNDERHILL MITIGATION SITE
SWIFT CREEK
DSA 1-5
END PROJECT R-2828 BEGIN PROJECT R-2829
WAKE COUNTY
JOHNSTON COUNTY
COLONIAL PIPELINE
SWIFT CREEK
OLD NORTH VINEYARD
NEW BETHEL RD.
DUKE ENERGY TRANSMISSION LINE
JOHNSONS POND
WHITE OAK RD
TO CLAYTON
LEES PLANTATION
WINSTON PLANTATION
SOUTHSIDE COMMUNITY CHURCH
CORNWALLIS RD.
WHITE OAK
WHITE OAK CREEK
US 70 BYPASS
TO CLAYTON
70 BYP
CLEVELAND RD.
TO BENSON
MALLARDS RIDGE
CARRINGTON PLACE
LAFAYETTE PLACE
KYNDAL
AUSTINS POND

Detailed Study Alternative (DSA) Number and Color Sequence

1	O G	8	O PU BL L G	13	O L G
2	O G M G	9	O PU BL L G M G	14	O L G M G
3	O B T G	10	O PU BL L B T G	15	O L B T G
4	O B G	11	O PU BL L B G	16	O L B G
5	O G TL B G	12	O PU BL L G TL B G	17	O L G TL B G
6	O R G				
7	O R M G				

Corridor Segments Key

O	Orange	PU	Purple	L	Lilac	TL	Teal	B	Brown
G	Green	BL	Blue	R	Red	T	Tan	M	Mint

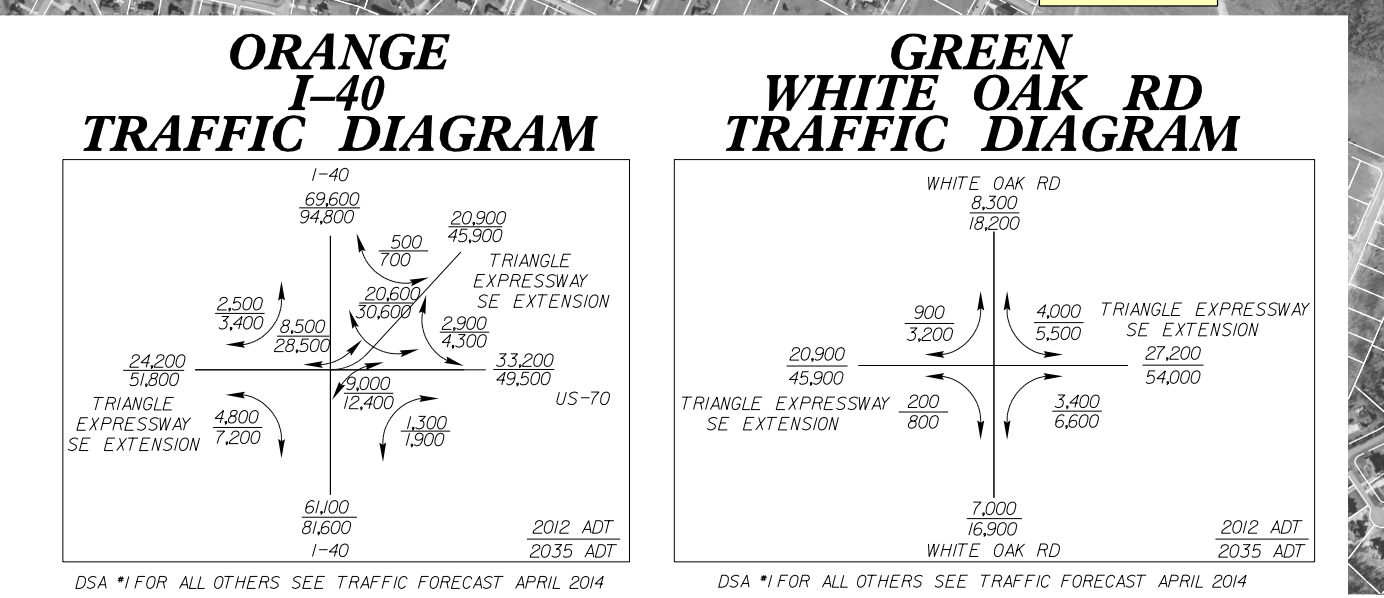
ORANGE I–40 TRAFFIC DIAGRAM

GREEN WHITE OAK RD TRAFFIC DIAGRAM
I-40
69,600 / 94,800
500 / 700
20,900 / 45,900
TRIANGLE EXPRESSWAY SE EXTENSION
2,500 / 3,400
8,500 / 28,500
20,600 / 30,600
2,900 / 4,300
24,200 / 51,800
33,200 / 49,500
US-70
9,000 / 12,400
TRIANGLE EXPRESSWAY SE EXTENSION
4,800 / 7,200
1,300 / 1,900
61,100 / 81,600
I-40
2012 ADT / 2035 ADT
WHITE OAK RD
8,300 / 18,200
900 / 3,200
4,000 / 5,500
TRIANGLE EXPRESSWAY SE EXTENSION
20,900 / 45,900
27,200 / 54,000
TRIANGLE EXPRESSWAY SE EXTENSION
200 / 800
3,400 / 6,600
7,000 / 16,900
WHITE OAK RD
2012 ADT / 2035 ADT
DSA *1 FOR ALL OTHERS SEE TRAFFIC FORECAST APRIL 2014

DSA *1 FOR ALL OTHERS SEE TRAFFIC FORECAST APRIL 2014

CORRIDOR PUBLIC HEARING MAP

S.T.I.P. NOS. R–2721, R–2828, R–2829
STATE PROJECT NOS. 6.401078, 6.401079, 6.401080
FEDERAL AID PROJECT NOS.
STP–540(19), STP–540(20), STP–540(21)
WBS NOS. 37673.1.TA2, 35516.1.TA2, 35517.1.TA1

WAKE / JOHNSTON COUNTIES

COMPLETE 540
TRIANGLE EXPRESSWAY SOUTHEAST EXTENSION
NC 55 BYPASS TO US 64 / 264 BYPASS / I–495

SHEET 6A OF 8

NORTH CAROLINA Turnpike Authority

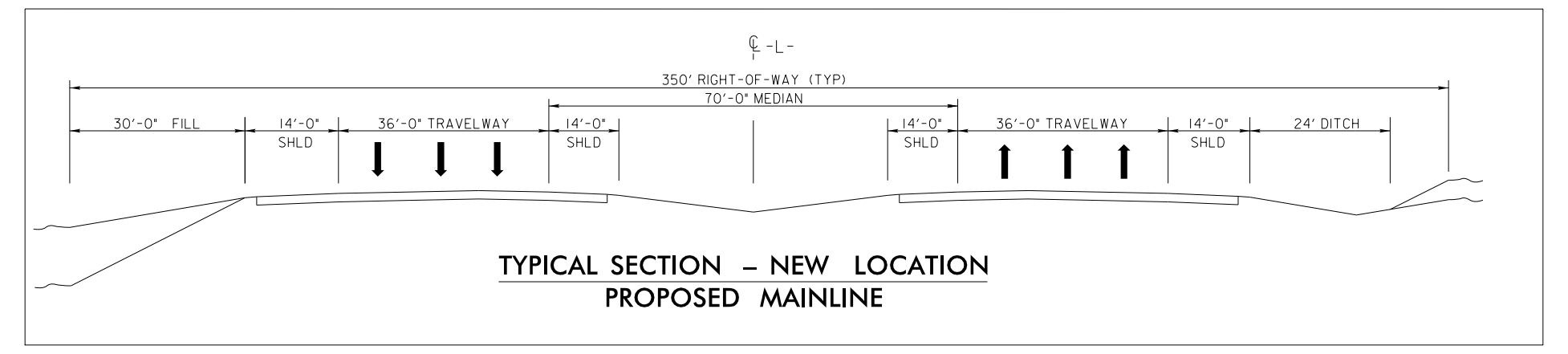
¢ -L-
350' RIGHT-OF-WAY (TYP)
70'-0" MEDIAN
30'-0" FILL
14'-0" SHLD
36'-0" TRAVELWAY
14'-0" SHLD
14'-0" SHLD
36'-0" TRAVELWAY
14'-0" SHLD
24' DITCH
TYPICAL SECTION – NEW LOCATION
PROPOSED MAINLINE

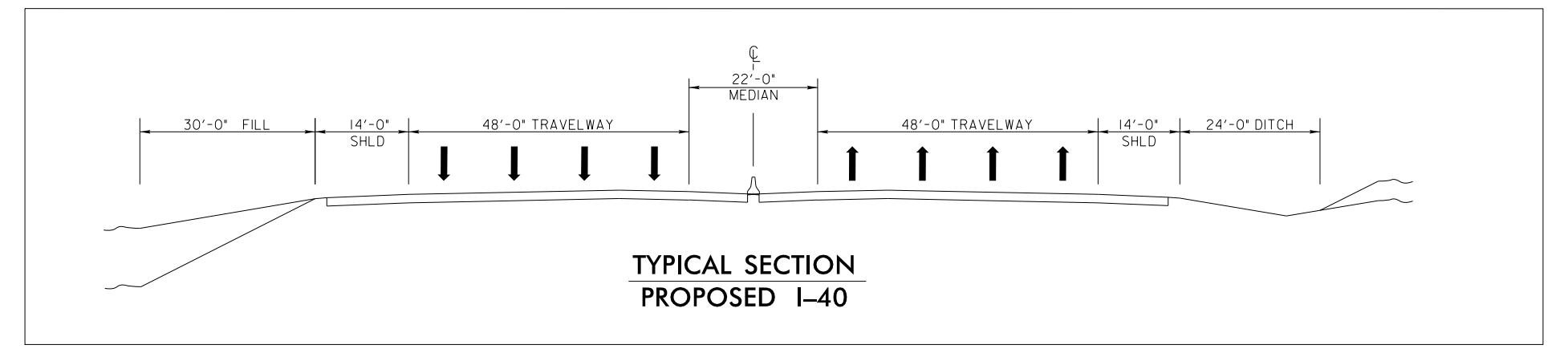
¢
22'-0" MEDIAN
30'-0" FILL
14'-0" SHLD
48'-0" TRAVELWAY
48'-0" TRAVELWAY
14'-0" SHLD
24'-0" DITCH
TYPICAL SECTION
PROPOSED I–40

LEGEND

▨	ORANGE CORRIDOR
▨	PURPLE CORRIDOR
▨	BLUE CORRIDOR
▨	LILAC CORRIDOR
▨	RED CORRIDOR
▨	GREEN CORRIDOR
▨	MINT CORRIDOR
▨	BROWN CORRIDOR
▨	TAN CORRIDOR
▨	TEAL CORRIDOR
—℞—	PROPOSED RIGHT OF WAY
—●—	PROPOSED CONTROL OF ACCESS
○	EXISTING CONTROL OF ACCESS
——	GREENWAYS
- - -	RELOCATED GREENWAY
-------	CITY OR TOWNSHIP LIMITS
■ ■ ■ ■	COUNTY LIMITS
——	PROPERTY LINES
▬	UTILITY EASEMENT
▨	CEMETERY
HPB	HISTORIC PROPERTY
▬	LAKES, RIVERS, STREAMS AND PONDS
⁎ ⁎ ⁎ ⁎ ⁎	WETLAND
- -WLB- -	WETLAND LIMITS BOUNDARY
- JS NEU -	JURISDICTIONAL STREAM LINES
▩	CRITICAL WATERSHED AREA
▩	NOISE STUDY AREA
▬	PROPOSED STRUCTURES
▨	EXISTING STRUCTURES TO BE RETAINED
▨	EXISTING STRUCTURES TO BE REMOVED
2012 / 2035	PRESENT AVERAGE DAILY TRAFFIC (ADT) FUTURE AVERAGE DAILY TRAFFIC (ADT)
🚦	EXISTING TRAFFIC SIGNAL

NOTE:
Full Control of Access is defined as a connection to a facility provided only via ramps at interchanges. All cross–streets are grade–separated. No private driveway connections allowed.

DESIGN DATA		
Functional Class.	=	Freeway
Design Speed	=	70 mph
Max. Superelev.	=	0.08

ORTHOPHOTO DATA		
GIS Aerial Mapping	=	JAN 2014
GIS Property Boundaries	=	JULY 2015

PRELIMINARY PLANS
SUBJECT TO CHANGE

INCOMPLETE PLANS
DO NOT USE FOR R/W ACQUISITION

500' 250' 0' 500' 1000'
(ENGLISH)

INSET O–B ORANGE TO BROWN

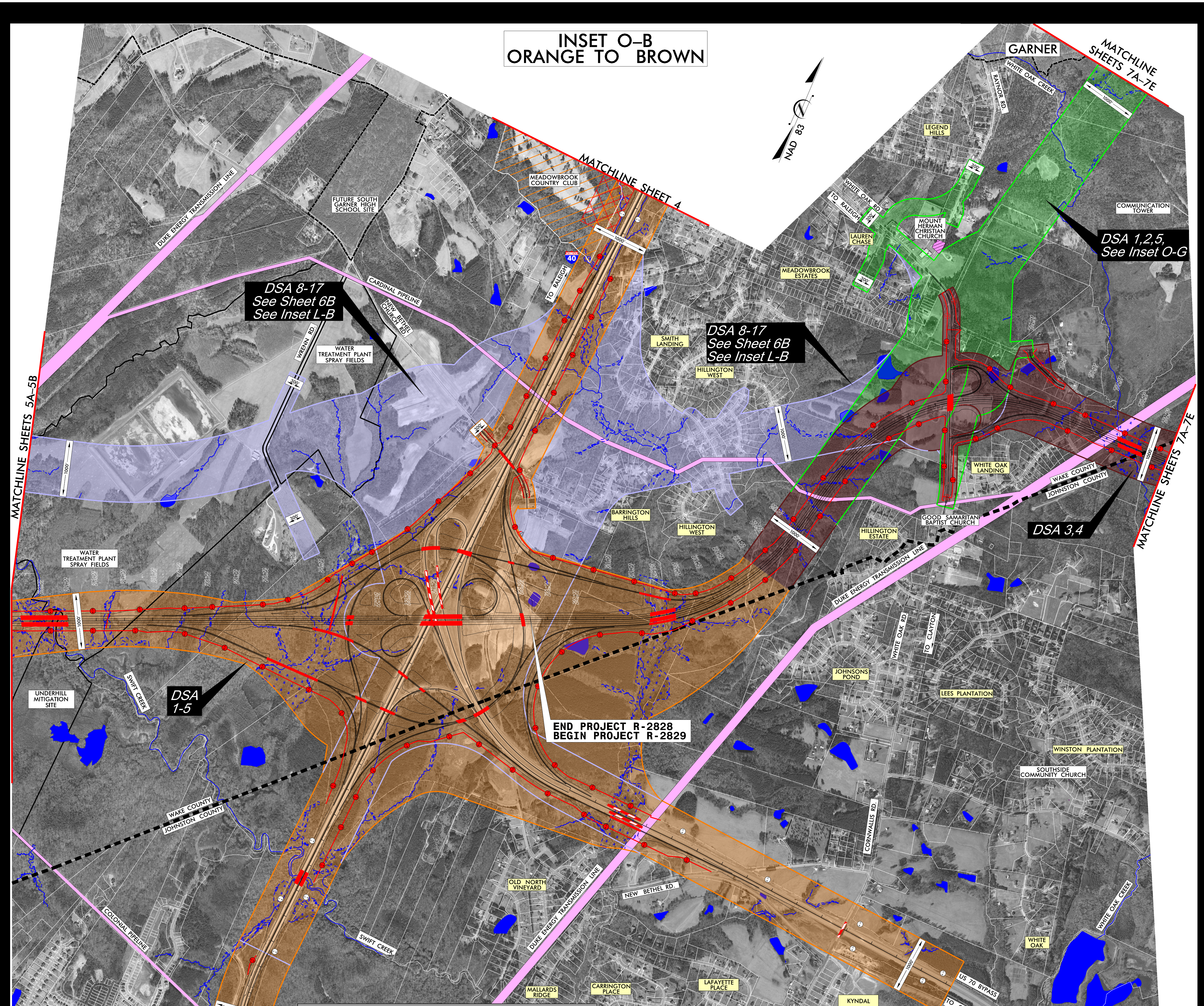
MATCHLINE SHEET 4
NAD 83
DUKE ENERGY TRANSMISSION LINE
FUTURE SOUTH GARNER HIGH SCHOOL SITE
MEADOWBROOK COUNTRY CLUB
1000'
40
TO RALEIGH
CARDINAL PIPELINE
NEW BETHEL CHURCH RD.
DSA 8-17 See Sheet 6B See Inset L-B
WRENN RD.
WATER TREATMENT PLANT SPRAY FIELDS
300'
GARNER
WHITE OAK CREEK
RAYNOR RD.
MATCHLINE SHEETS 7A–7E
LEGEND HILLS
WHITE OAK RD
TO RALEIGH
LAUREN CHASE
MOUNT HERMAN CHRISTIAN CHURCH
MEADOWBROOK ESTATES
COMMUNICATION TOWER
DSA 1,2,5, See Inset O-G
SMITH LANDING
HILLINGTON WEST
DSA 8-17 See Sheet 6B See Inset L-B
BARRINGTON HILLS
HILLINGTON WEST
HILLINGTON ESTATE
GOOD SAMARITAN BAPTIST CHURCH
WHITE OAK LANDING
WAKE COUNTY
JOHNSTON COUNTY
DSA 3,4
MATCHLINE SHEETS 7A–7E
MATCHLINE SHEETS 5A–5B
WATER TREATMENT PLANT SPRAY FIELDS
UNDERHILL MITIGATION SITE
SWIFT CREEK
DSA 1-5
END PROJECT R-2828 BEGIN PROJECT R-2829
WAKE COUNTY
JOHNSTON COUNTY
COLONIAL PIPELINE
SWIFT CREEK
OLD NORTH VINEYARD
NEW BETHEL RD.
DUKE ENERGY TRANSMISSION LINE
JOHNSONS POND
WHITE OAK RD
TO CLAYTON
LEES PLANTATION
WINSTON PLANTATION
SOUTHSIDE COMMUNITY CHURCH
CORNWALLIS RD.
WHITE OAK
WHITE OAK CREEK
US 70 BYPASS
TO CLAYTON
70 BYP
CLEVELAND RD.
TO BENSON
MALLARDS RIDGE
CARRINGTON PLACE
LAFAYETTE PLACE
KYNDAL
AUSTINS POND

Detailed Study Alternative (DSA) Number and Color Sequence

1	O G	8	O PU BL L G	13	O L G
2	O G M G	9	O PU BL L G M G	14	O L G M G
3	O B T G	10	O PU BL L B T G	15	O L B T G
4	O B G	11	O PU BL L B G	16	O L B G
5	O G TL B G	12	O PU BL L G TL B G	17	O L G TL B G
6	O R G				
7	O R M G				

Corridor Segments Key

O	Orange	PU	Purple	L	Lilac	TL	Teal	B	Brown
G	Green	BL	Blue	R	Red	T	Tan	M	Mint

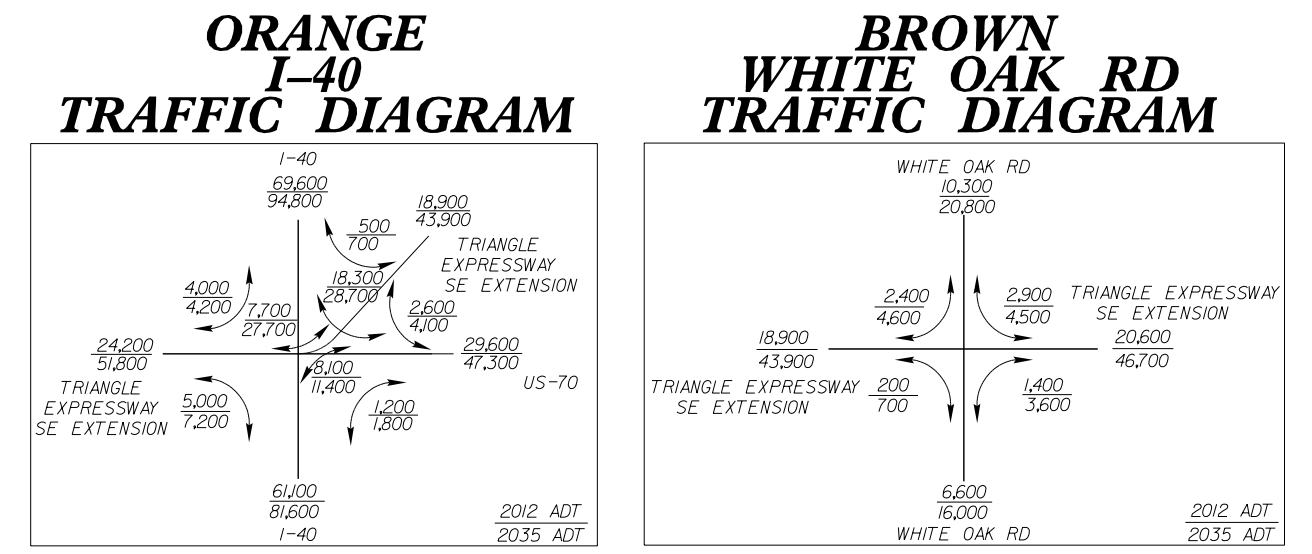
ORANGE I–40 TRAFFIC DIAGRAM

BROWN WHITE OAK RD TRAFFIC DIAGRAM
I-40
69,600 / 94,800
500 / 700
18,900 / 43,900
TRIANGLE EXPRESSWAY SE EXTENSION
4,000 / 4,200
7,700 / 27,700
18,300 / 28,700
2,600 / 4,100
24,200 / 51,800
29,600 / 47,300
US-70
8,100 / 11,400
TRIANGLE EXPRESSWAY SE EXTENSION
5,000 / 7,200
1,200 / 1,800
61,100 / 81,600
I-40
2012 ADT / 2035 ADT
WHITE OAK RD
10,300 / 20,800
2,400 / 4,600
2,900 / 4,500
TRIANGLE EXPRESSWAY SE EXTENSION
18,900 / 43,900
20,600 / 46,700
TRIANGLE EXPRESSWAY SE EXTENSION
200 / 700
1,400 / 3,600
6,600 / 16,000
WHITE OAK RD
2012 ADT / 2035 ADT
DSA *3 FOR ALL OTHERS SEE TRAFFIC FORECAST APRIL 2014

DSA *3 FOR ALL OTHERS SEE TRAFFIC FORECAST APRIL 2014

CORRIDOR PUBLIC HEARING MAP
S.T.I.P. NOS. R–2721, R–2828, R–2829
STATE PROJECT NOS. 6.401078, 6.401079, 6.401080
FEDERAL AID PROJECT NOS.
STP–540(19), STP–540(20), STP–540(21)
WBS NOS. 37673.1.TA2, 35516.1.TA2, 35517.1.TA1
WAKE / JOHNSTON COUNTIES
COMPLETE 540
TRIANGLE EXPRESSWAY SOUTHEAST EXTENSION
NC 55 BYPASS TO US 64 / 264 BYPASS / I–495
SHEET 6A OF 8
NORTH CAROLINA Turnpike Authority