Docusign Envelope ID: 426BC4E7-9E31-8FEC-82B3-E00BDE3EE578

09/08/99

TIP PROJECT: U-4700CB

CONTRACT: C204947

STATE OF NORTH CAROLINA
DIVISION OF HIGHWAYS

CALDWELL COUNTY

STATE	STATE PROJECT REFERENCE NO.	SHEET NO.	TOTAL SHEETS
N.C.	U-4700CB	1	

STATE PROJ. NO.	F. A. PROJ. NO.	DESCRIPTION
35993.1.11		PE
35993.2.9	NHP-0321(046)	ROW
35993.2.13	NHP-0321(046)	UTIL
35993.3.9	NHP-0321(046)	CONST

LOCATION: US 321- AT SR 1809 /1952 (PINE MOUNTAIN ROAD)

TYPE OF WORK: GRADING, DRAINAGE, PAVING, SIGNALS AND RETAINING WALL

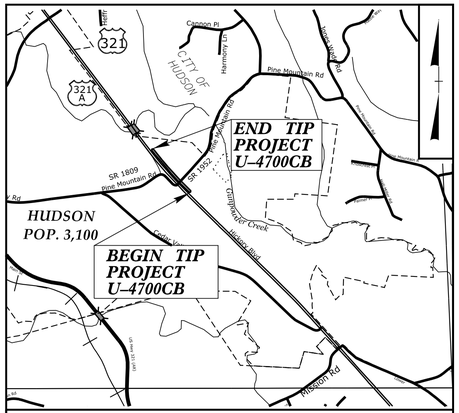

VICINITY MAP NTS

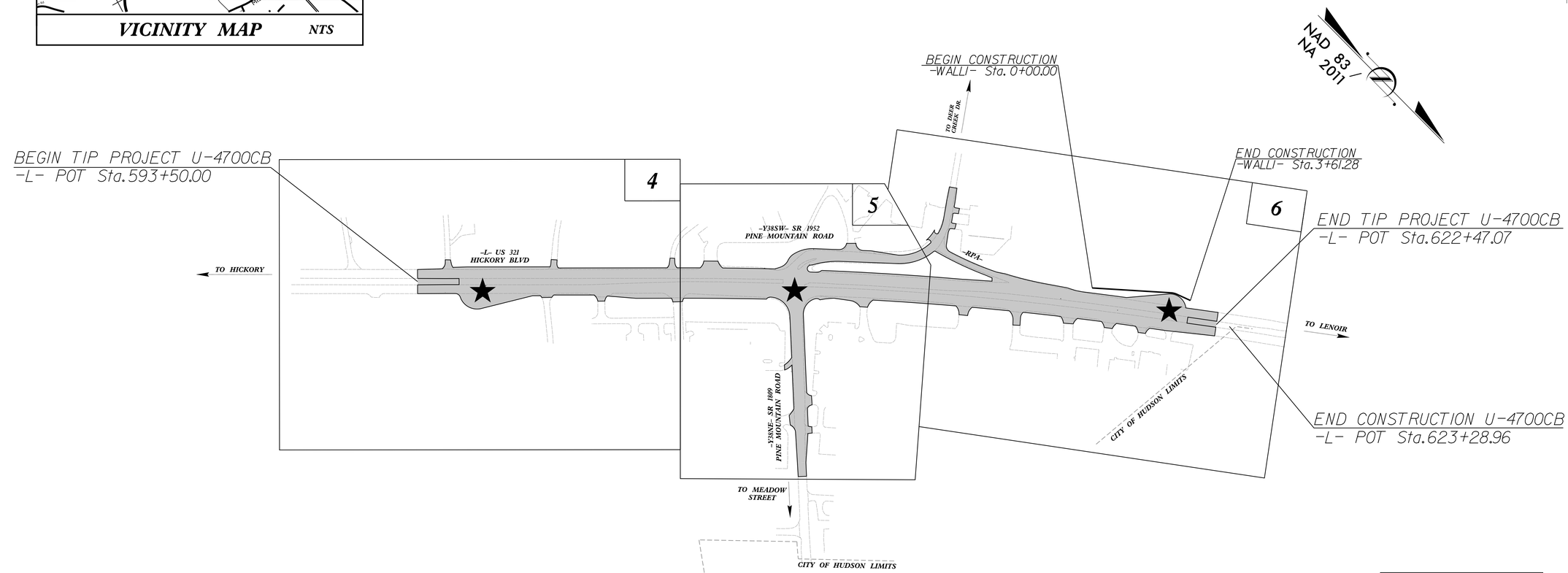

★ PROPOSED SIGNAL

This is a Limited Controlled Access Project with access being limited to interchanges and at-grade intersections.

NCDOT CONTACT: RAMIE A. SHAW, PE DIVISION PROJECT DEVELOPEMENT ENGINEER

DOCUMENT NOT CONSIDERED FINAL UNLESS ALL SIGNATURES COMPLETED

GRAPHIC SCALES

50 25 0 50 100
PLANS

50 25 0 50 100
PROFILE (HORIZONTAL)

10 5 0 10 20
PROFILE (VERTICAL)

DESIGN DATA

ADT 2026 = 38,200
ADT 2046 = 50,000
K = 8 %
D = 55 %
T = 6 % *
V = 60 MPH
* TTST = 3% DUAL 3%
FUNC CLASS =
PRINCIPAL ARTERIAL
STATEWIDE TIER

PROJECT LENGTH

LENGTH ROADWAY PROJECT U-4700CB = 0.549 MI.
TOTAL LENGTH OF PROJECT U-4700CB = 0.549 MI.

Prepared In the Office of:

Johnson, Mirmiran, & Thompson Inc.
4700 Falls of Neuse Rd, Suite 100,
Raleigh, NC, 27609
License No: C-3097

2024 STANDARD SPECIFICATIONS

RIGHT OF WAY DATE:
DECEMBER 31, 2018

LETTING DATE:
SEPTEMBER 15, 2026

REECE SCHULER, PE, PLS
PROJECT ENGINEER

JOSHUA ROEMER, PE
PROJECT DESIGN ENGINEER

HYDRAULICS ENGINEER
6/2/2026 | 2:06:22 PM PDT
Signed by: Kevin Higgins
E898DBE48FC0444...
SIGNATURE: P.E.
NORTH CAROLINA PROFESSIONAL SEAL 035700 ENGINEER KEVIN P. HIGGINS

ROADWAY DESIGN ENGINEER
6/2/2026 | 2:49:04 PM PDT
DocuSigned by: Reece Schuler
B34024C7824FC...
SIGNATURE: P.E.
NORTH CAROLINA PROFESSIONAL SEAL 26960 ENGINEER REECE M. SCHULER

STATE OF NORTH CAROLINA DEPARTMENT OF TRANSPORTATION

5/28/2026 3:57:46 PM
...\Proj\U4700CB_Rdy_TSH.dgn
User:jroemer

Docusign Envelope ID: 426BC4E7-9E31-8FEC-82B3-E00BDE3EE578

6/2/99

DOCUMENT NOT CONSIDERED FINAL UNLESS ALL SIGNATURES COMPLETED	PROJECT REFERENCE NO.	SHEET NO.
	U-4700CB	2A-1

PAVEMENT DESIGN ENGINEER
6/2/2026 1:44:04 PM PDT
NORTH CAROLINA PROFESSIONAL SEAL 049851 ENGINEER
KAMIL A. SHAW
Kamil Shaw

ROADWAY DESIGN ENGINEER
6/2/2026 1:48:04 PM PDT
NORTH CAROLINA PROFESSIONAL SEAL 26960 ENGINEER
REECE SCHULER
Reece Schuler

Johnson, Mirmiran, & Thompson Inc.
4700 Falls of Neuse Rd, Suite 100,
Raleigh, NC, 27609
License No: C-3097

FINAL PAVEMENT SCHEDULE

C1	PROP. APPROX. 3″ ASPHALT CONCRETE SURFACE COURSE, TYPE S9.5C, AT AN AVERAGE RATE OF 168 LBS PER SQ. YARD IN EACH OF TWO LAYERS.	R3	EXPRESSWAY GUTTER
C2	PROP. VAR. DEPTH ASPHALT CONCRETE SURFACE COURSE, TYPE S9.5C, AT AN AVERAGE RATE OF 112 LBS. PER SQ. YARD PER 1″ DEPTH TO BE PLACED IN LAYERS NOT TO EXCEED 2″ IN DEPTH.	S	4″ CONCRETE SIDEWALK
D1	PROP. APPROX. 4.0″ ASPHALT CONCRETE INTERMEDIATE COURSE, TYPE I19.0C, AT AN AVERAGE RATE OF 456 LBS PER SQ. YARD.	T	EARTH MATERIAL
D2	PROP. VAR. DEPTH ASPHALT CONCRETE INTERMEDIATE COURSE, TYPE I19.0C, AT AN AVERAGE RATE OF 114 LBS. PER SQ. YARD PER 1″ DEPTH TO BE PLACED IN LAYERS NOT LESS THAN 2.5″ IN DEPTH OR GREATER THAN 4.0″ IN DEPTH.	U	EXISTING PAVEMENT
E1	PROP. APPROX. 5.5″ ASPHALT CONCRETE BASE COURSE, TYPE B25.0C, AT AN AVERAGE RATE OF 627 LBS PER SQ. YARD.	V1	MILLING BITUMINOUS PAVEMENT. 1.5″ DEPTH
E2	PROP. VAR. DEPTH ASPHALT CONCRETE BASE COURSE, TYPE B25.0C, AT AN AVERAGE RATE OF 114 LBS. PER SQ. YARD PER 1″ DEPTH TO BE PLACED IN LAYERS NOT GREATER THAN 5.5″ IN DEPTH OR LESS THAN 3.0″ IN DEPTH.	V2	INCIDENTAL MILLING BITUMINOUS PAVEMENT, VARIABLE 0″ TO 1.5″ DEPTH
R1	1′ - 6″ CURB AND GUTTER	W	VARIABLE DEPTH ASPHALT PAVEMENT (SEE STANDARD WEDGING DETAIL THIS SHEET)
R2	2′-6″ CURB AND GUTTER		

NOTE: PAVEMENT EDGE SLOPES ARE 1:1 UNLESS SHOWN OTHERWISE.

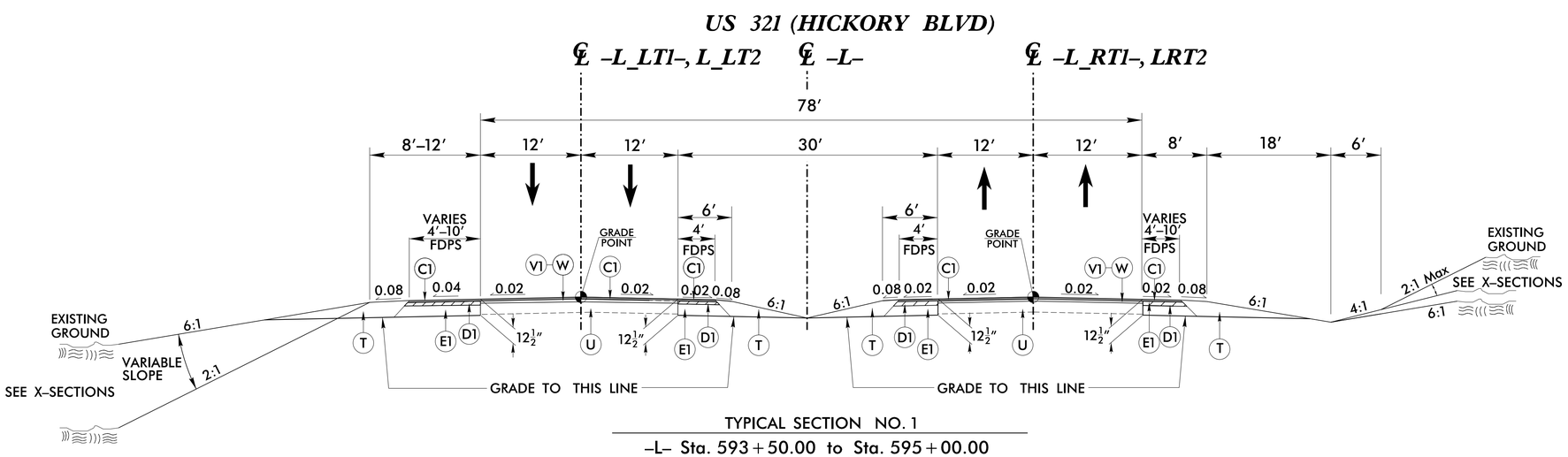

TYPICAL SECTION NO. 1

–L– Sta. 593+50.00 to Sta. 595+00.00
–L– Sta. 621+41.31 to Sta. 622+47.07

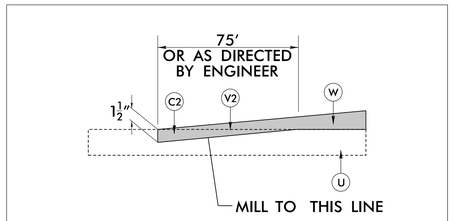

DETAIL SHOWING INCIDENTAL MILLING

–L– Sta. 593+50.00 to Sta. 594+25.00 RT
–L– Sta. 593+50.00 to Sta. 594+25.00 LT
–L– Sta. 621+72.07 to Sta. 622+47.07 RT
–L– Sta. 621+72.07 to Sta. 622+47.07 LT
–Y38SW– Sta. 10+30.00 to Sta. 11+05.00
–Y38SW– Sta. 16+65.00 to Sta. 17+40.00
–RPA– Sta. 5+00.00 to Sta. 5+75.00
–RPA– Sta. 8+95.03 to Sta. 9+70.03

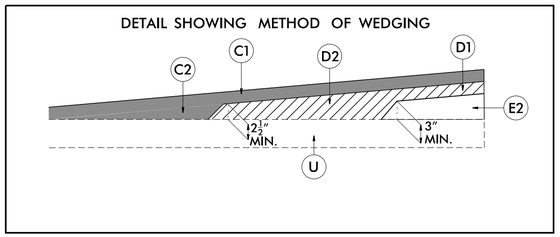

5/29/2026 10:26:26 AM
U:\Projects\U-4700CB-R01_TYP2A-1.dgn
User: cuerrier

Docusign Envelope ID: 426BC4E7-9E31-8FEC-82B3-E00BDE3EE578

6/2/99

PAVEMENT SCHEDULE	
C1	3" TYPE S9.5C
C2	VAR. TYPE S9.5C
D1	4" TYPE I19.0C
D2	VAR. TYPE I19.0C
E1	5.5" TYPE B25.0C
E2	VAR. TYPE B25.0C
R1	1' - 6" CURB AND GUTTER
R2	2'-6" CURB AND GUTTER
R3	EXPRESSWAY GUTTER
S	4" CONCRETE SIDEWALK
T	EARTH MATERIAL
U	EXISTING PAVEMENT
V1	MILLING BITUMINOUS PAVEMENT. 1.5" DEPTH
V2	INCIDENT. MILLING BIT. PVT. 0" TO 3" DEPTH
W	VAR. DEPTH ASPHALT PAVEMENT

NOTE: PAVEMENT EDGE SLOPES ARE 1:1 UNLESS SHOWN OTHERWISE.

DOCUMENT NOT CONSIDERED FINAL UNLESS ALL SIGNATURES COMPLETED

PROJECT REFERENCE NO.	SHEET NO.
U-4700CB	2A-2

PAVEMENT DESIGN ENGINEER
6/2/2026 1:44:04 PM PDT
NORTH CAROLINA PROFESSIONAL SEAL 049851 ENGINEER JAMIE A. SHAW
Jamie Shaw
C8C0B7B8B1E4E6...

ROADWAY DESIGN ENGINEER
6/2/2026 1:49:04 PM PDT
NORTH CAROLINA PROFESSIONAL SEAL 26960 ENGINEER REECE W. SCHULER
Reece Schuler
100B4D4B7B4BFC...

Johnson, Mirmiran, & Thompson Inc.
4700 Falls of Neuse Rd, Suite 100,
Raleigh, NC, 27609
License No: C-3097

℄ –L– US 321 (HICKORY BLVD)

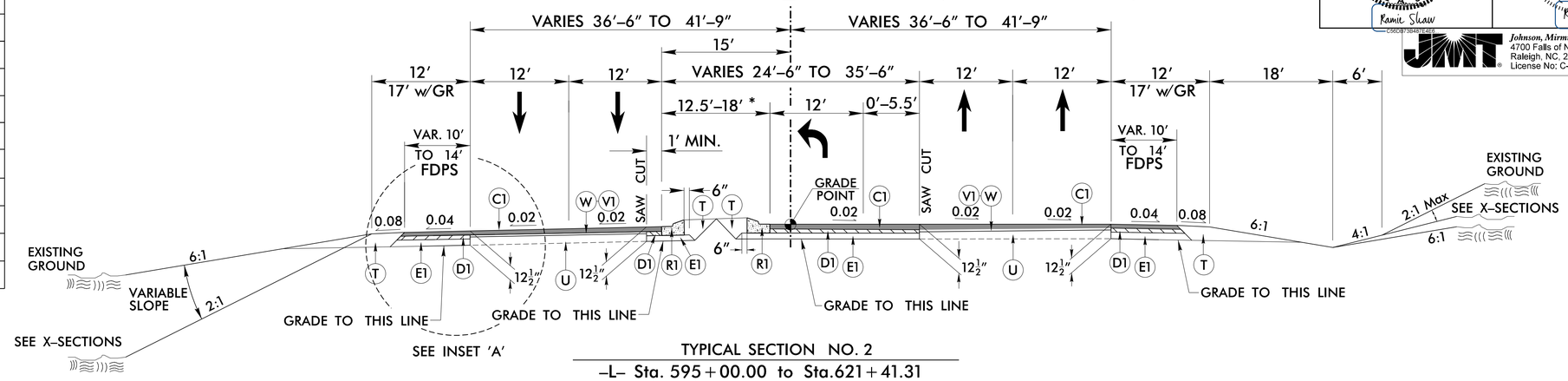

TYPICAL SECTION NO. 2

–L– Sta. 595+00.00 to Sta.621+41.31

* MIRROR MEDIAN ISLAND AND LEFT TURN LANE ABOUT CENTERLINE FROM Sta. 595+00.00 TO Sta. 598+97.29 AND Sta. 607+15.78 TO Sta. 613+58.94

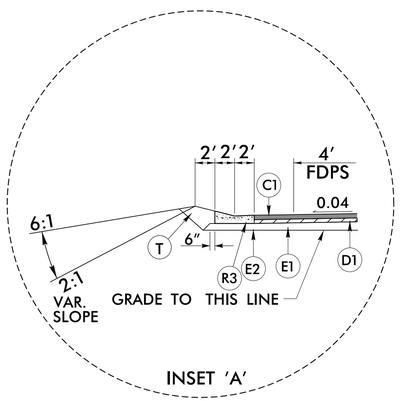

–L– Sta. 617+22.97 LT to Sta. 621+41.31 LT

℄ –Y38SW– SR 1809 (PINE MOUNTAIN RD)

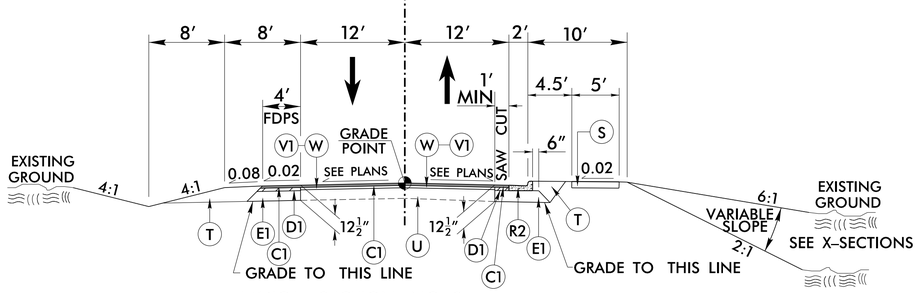

TYPICAL SECTION NO. 3

–Y38SW– Sta. 10+30.00 TO Sta. 12+50.00
–Y38SW– Sta. 12+80.00 TO Sta. 15+25.00
–Y38SW– Sta. 15+85.00 TO Sta. 17+40.00

℄ –Y38SW– SR 1809 (PINE MOUNTAIN RD)

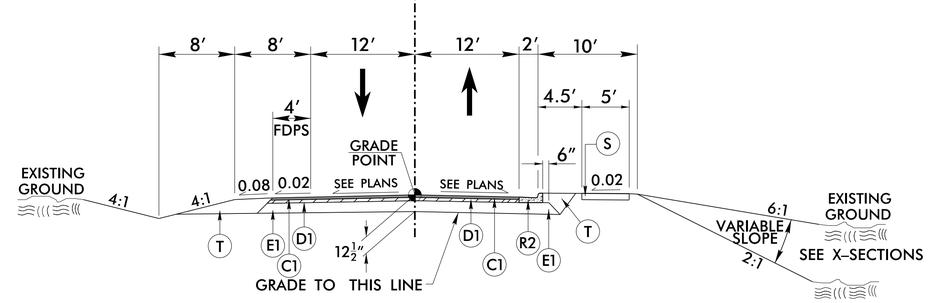

TYPICAL SECTION NO. 4

–Y38SW– STA. 12+50.00 TO STA 12+80.00
–Y38SW– STA. 15+25.00 TO STA 15+85.00
–Y38SW– STA. 17+40.00 TO STA. 17+75.00

5/29/2026 10:06:08 AM
U-4700CB_RDY_TYP2A-2.dgn

Docusign Envelope ID: 426BC4E7-9E31-8FEC-82B3-E00BDE3EE578

6/2/99

PAVEMENT SCHEDULE	
C1	3" TYPE S9.5C
C2	VAR. TYPE S9.5C
D1	4" TYPE I19.0C
D2	VAR. TYPE I19.0C
E1	5.5" TYPE B25.0C
E2	VAR. TYPE B25.0C
R1	1' - 6" CURB AND GUTTER
R2	2'-6" CURB AND GUTTER
R3	EXPRESSWAY GUTTER
S	4" CONCRETE SIDEWALK
T	EARTH MATERIAL
U	EXISTING PAVEMENT
V1	MILLING BITUMINOUS PAVEMENT. 1.5" DEPTH
V2	INCIDENT. MILLING BIT. PVT. 0" TO 3" DEPTH
W	VAR. DEPTH ASPHALT PAVEMENT

NOTE: PAVEMENT EDGE SLOPES ARE 1:1 UNLESS SHOWN OTHERWISE.

DOCUMENT NOT CONSIDERED FINAL UNLESS ALL SIGNATURES COMPLETED

PROJECT REFERENCE NO.	SHEET NO.
U-4700CB	2A-3

PAVEMENT DESIGN ENGINEER
6/2/2026 | 2:44:04 PM PDT
NORTH CAROLINA PROFESSIONAL SEAL 049851 ENGINEER RAMIE A. SHAWAN
Ramie Shawan

ROADWAY DESIGN ENGINEER
6/2/2026 | 2:49:04 PM PDT
NORTH CAROLINA PROFESSIONAL SEAL 26960 ENGINEER REECE SCHULER
Reece Schuler

Johnson, Mirmiran, & Thompson Inc.
4700 Falls of Neuse Rd, Suite 100,
Raleigh, NC, 27609
License No: C-3097

℄ –Y38NE– SR 1809 (PINE MOUNTAIN RD)

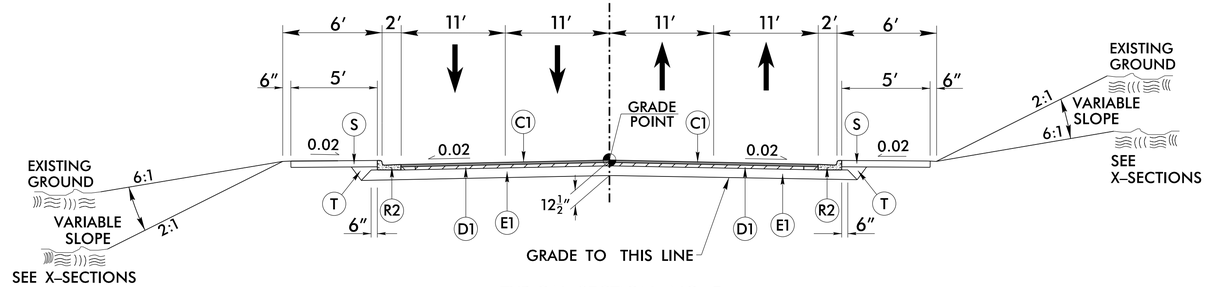

TYPICAL SECTION NO. 5

–Y38NE– Sta. 19+39.11 TO Sta. 25+50.00

℄ –RPA–

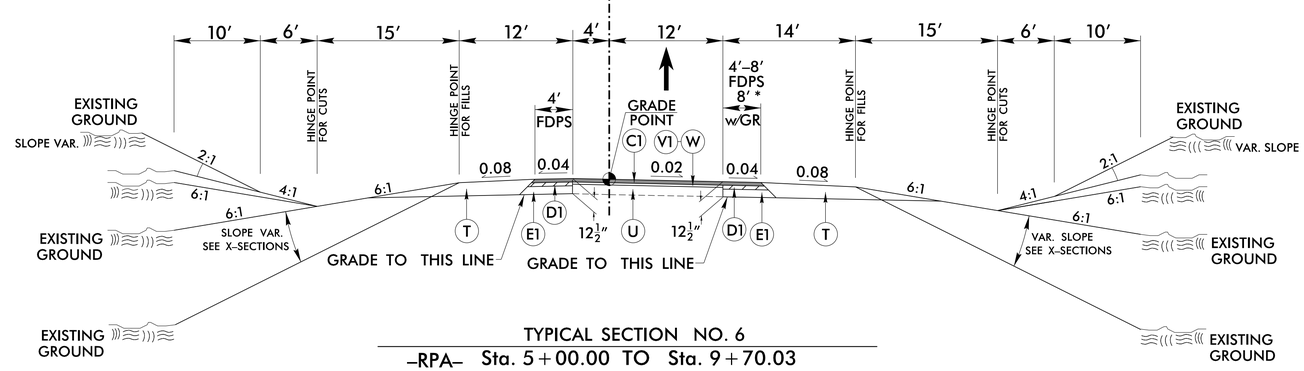

TYPICAL SECTION NO. 6

–RPA– Sta. 5+00.00 TO Sta. 9+70.03

*PROPOSED GUARDRAIL
–RPA– STA. 5+00.00 TO 7+00.00

5/29/2026 10:02:32 AM
*Pro:U4700CB_RDY_TYP2A-3.dgn
*Net:Combo

Docusign Envelope ID: 426BC4E7-9E31-8FEC-82B3-E00BDE3EE578

DOCUMENT NOT CONSIDERED FINAL UNLESS ALL SIGNATURES COMPLETED	PROJECT REFERENCE NO.	SHEET NO.
	U-4700CB	2B-1

ROADWAY DESIGN ENGINEER
6/2/2026 12:49:04 PM PDT

NORTH CAROLINA PROFESSIONAL SEAL 26960 ENGINEER RECE SCHILLER

Recee Schiller

JMT Johnson, Mirmiran, & Thompson Inc.
4700 Falls of Neuse Rd. Suite 100,
Raleigh, NC, 27609
License No: C-3097

50 25 0 50 100

INTERSECTION DETAILS
US 321 (–L–)

LEGEND
PROPOSED 5" MONOLITHIC ISLAND
PROPOSED 4" CONCRETE SIDEWALK
PROPOSED FULL DEPTH PAVED SHOULDER

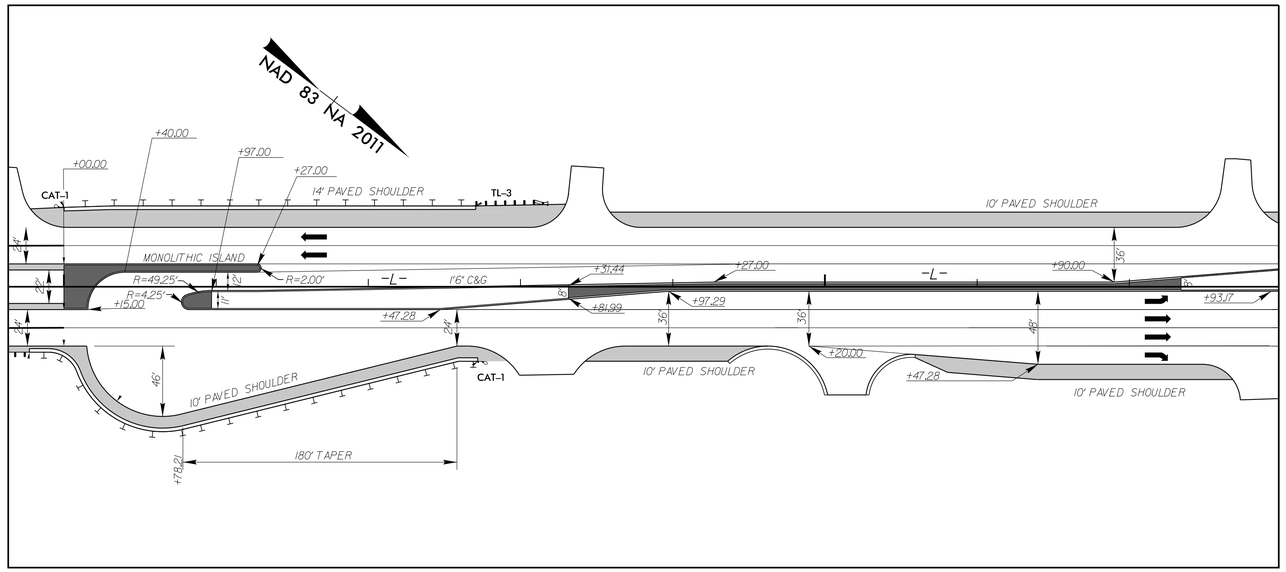

–L– Sta. 595+00 TO Sta. 603+00
INTERSECTION DETAIL SHOWN FROM PLAN SHEET 4

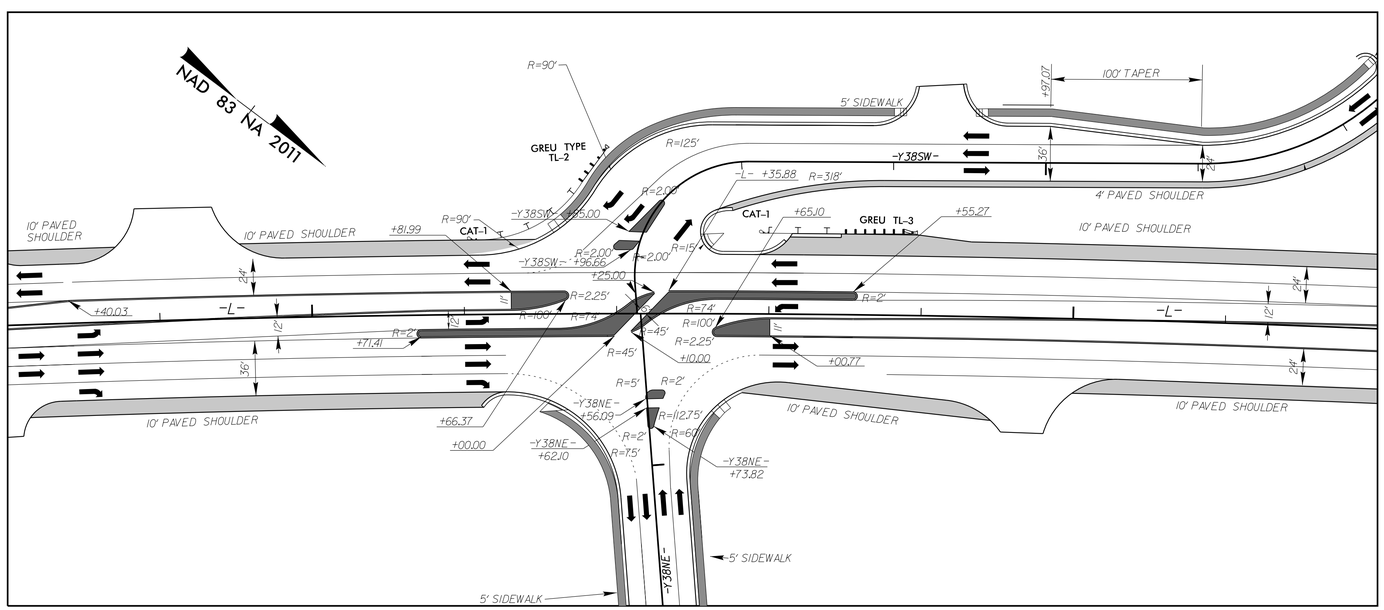

–L– Sta. 603+00 TO Sta. 612+00
INTERSECTION DETAIL SHOWN FROM PLAN SHEET 5

5/11/2026 5:21:45 PM
...\Proj\U4700CB_RDY_det2B-1.dgn
User:rcschiller

Docusign Envelope ID: 426BC4E7-9E31-8FEC-82B3-E00BDE3EE578

DOCUMENT NOT CONSIDERED FINAL UNLESS ALL SIGNATURES COMPLETED	PROJECT REFERENCE NO.	SHEET NO.
	U-4700CB	2B-2

ROADWAY DESIGN ENGINEER
6/2/2026 | 2:49:04 PM PDT
NORTH CAROLINA PROFESSIONAL SEAL 26960 ENGINEER REECE SCHULER
Docusigned by:
Reece Schuler
A6B8A9A5B7B24F5...

JMT
Johnson, Mirmiran, & Thompson Inc.
4700 Falls of Neuse Rd. Suite 100,
Raleigh, NC, 27609
License No: C-3097

INTERSECTION DETAILS
US 321 (–L–)

LEGEND
PROPOSED 5" MONOLITHIC ISLAND
PROPOSED 4" CONCRETE SIDEWALK
PROPOSED FULL DEPTH PAVED SHOULDER

50 25 0 50 100

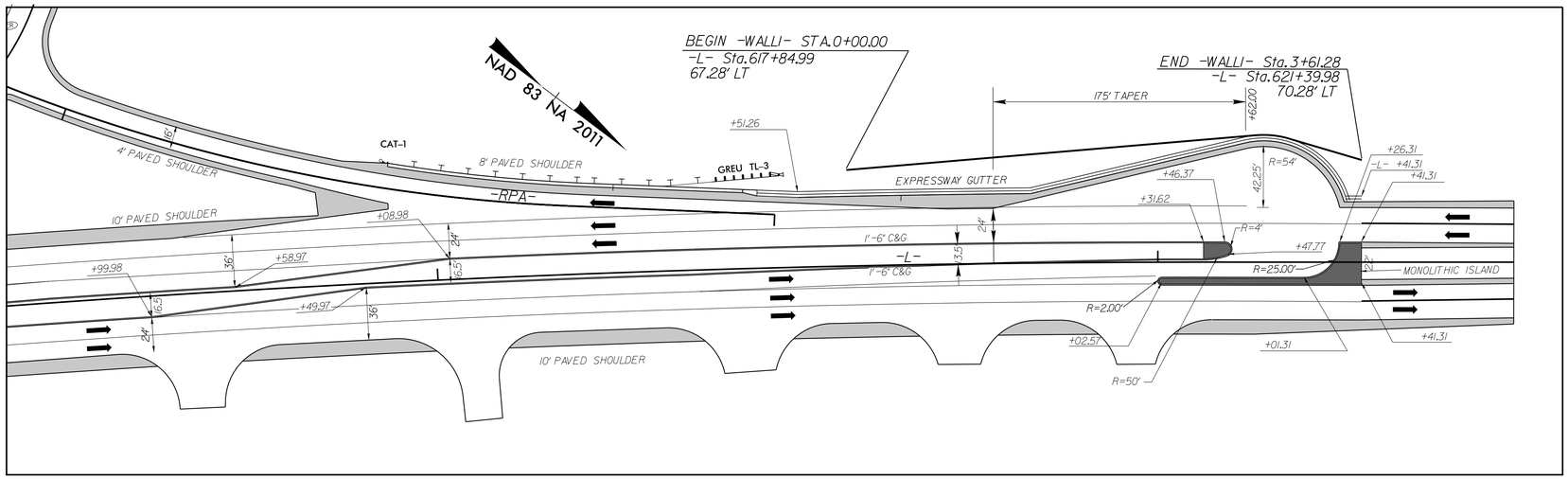

–L– Sta. 612+00 TO Sta. 622+47.07

INTERSECTION DETAIL SHOWN FROM PLAN SHEET 7

5/1/2026 5:40:34 PM
...\Proj\U4700CB_RDY_det2B-2.dgn
User:rcramer

Docusign Envelope ID: 426BC4E7-9E31-8FEC-82B3-E00BDE3EE578

PROJECT REFERENCE NO.	SHEET NO.
U-4700CB	2C-1

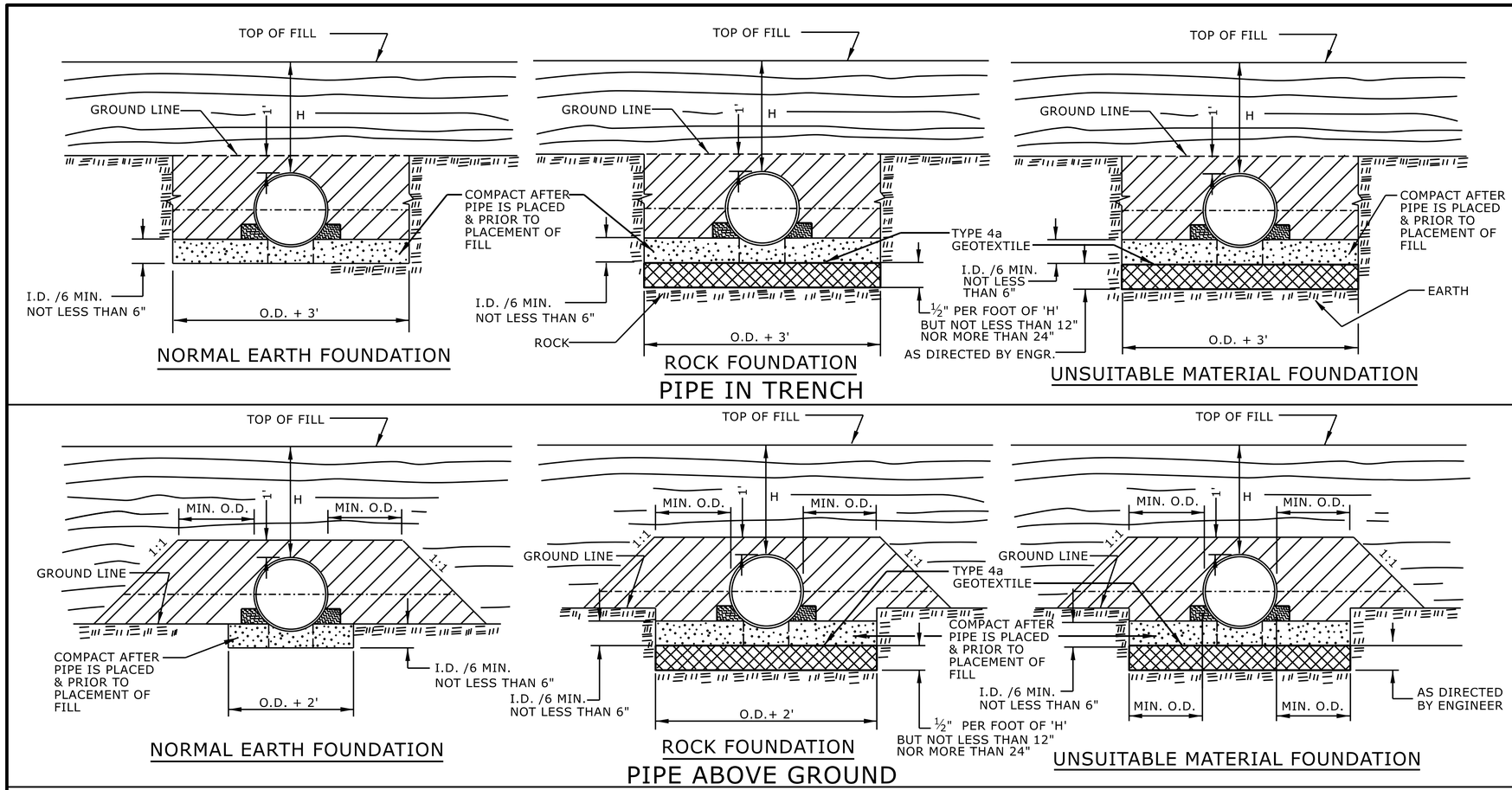

GENERAL NOTES:

I.D. = THE MAXIMUM HORIZONTAL INSIDE DIAMETER DIMENSION.

O.D. = THE MAXIMUM HORIZONTAL OUTSIDE DIAMETER DIMENSION.

H = THE FILL HEIGHT MEASURED VERTICALLY AT ANY POINT ALONG THE PIPE FROM THE TOP OF THE PIPE TO THE TOP OF THE EMBANKMENT AT THAT POINT.

APPROVED SUITABLE LOCAL MATERIAL.

TAKE CARE TO FULLY COMPACT HAUNCH ZONE OF PIPE BACKFILL.

LOOSELY PLACED SELECT MATERIAL CLASS III OR CLASS II, TYPE 1 FOR PIPE BEDDING. LEAVE SECTION DIRECTLY BENEATH PIPE UNCOMPACTED AS PIPE SEATING AND BACKFILL WILL ACCOMPLISH COMPACTION.

DO NOT OPERATE HEAVY EQUIPMENT OVER ANY PIPE CULVERT UNTIL THE PIPE CULVERT HAS BEEN PROPERLY BACKFILLED AND COVERED WITH AT LEAST 3 FEET OF APPROVED MATERIAL.

REFER TO NCDOT PIPE MATERIAL SELECTION GUIDE AND STANDARD SPECIFICATIONS FOR ALLOWABLE PIPE FILL HEIGHTS AND PIPE SPECIFICATIONS.

SPRINGLINE OF PIPE

SELECT BACKFILL MATERIAL CLASS III OR CLASS II, TYPE 1 ABOVE AND BELOW SPRINGLINE.

UNDISTURBED EARTH MATERIAL

SELECT MATERIAL CLASS V OR VI FOR FOUNDATION CONDITIONING. ENCAPSULATE WITH TYPE IV GEOTEXTILE AS DIRECTED BY THE ENGINEER.

STATE OF NORTH CAROLINA
DEPT. OF TRANSPORTATION
DIVISION OF HIGHWAYS
RALEIGH, N.C.

ROADWAY DETAIL DRAWING FOR

METHOD OF PIPE INSTALLATION

FLEXIBLE PIPE

SHEET 1 OF 2

300.01

6/2/2026 | 12:47:11 PM PDT

NORTH CAROLINA PROFESSIONAL SEAL 033144 ENGINEER NICOLE M. HACKLER

Signed by: Nicole M. Hackler
5884323D34164C5...

DOCUMENT NOT CONSIDERED FINAL UNLESS ALL SIGNATURES COMPLETED

CONTRACTS STANDARDS AND DEVELOPMENT UNIT
Office 919-707-6950 FAX 919-250-4119

SEE TITLE BLOCK

ORIGINAL BY: S.CALHOUN DATE: 7-25-2024
MODIFIED BY: DATE:
CHECKED BY: DATE:
FILE SPEC.:

Docusign Envelope ID: 426BC4E7-9E31-8FEC-82B3-E00BDE3EE578

PROJECT REFERENCE NO.	SHEET NO.
U-4700CB	2C-2

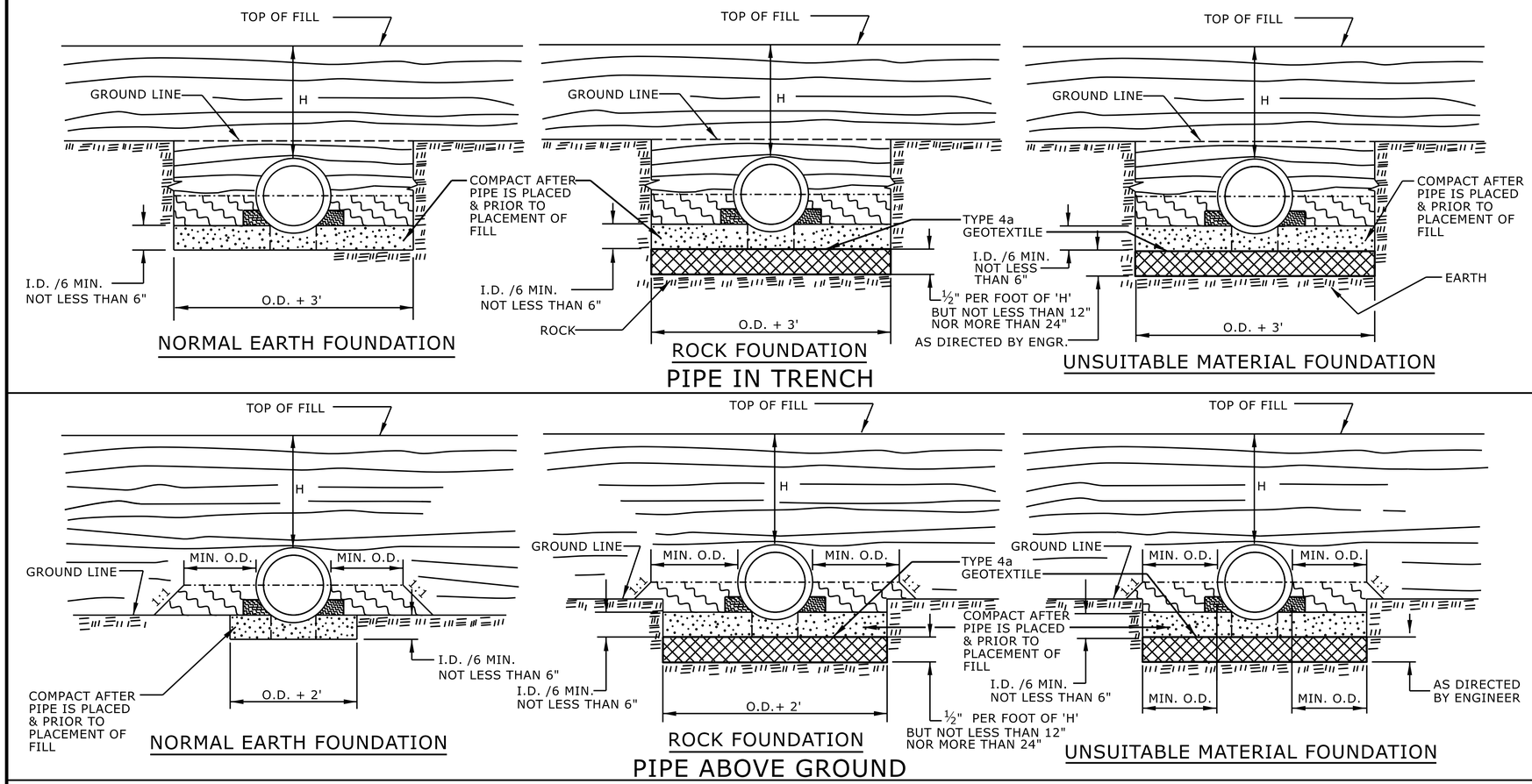

GENERAL NOTES:

I.D. = THE MAXIMUM HORIZONTAL INSIDE DIAMETER DIMENSION.

O.D. = THE MAXIMUM HORIZONTAL OUTSIDE DIAMETER DIMENSION.

H = THE FILL HEIGHT MEASURED VERTICALLY AT ANY POINT ALONG THE PIPE FROM THE TOP OF THE PIPE TO THE TOP OF THE EMBANKMENT AT THAT POINT.

APPROVED SUITABLE LOCAL MATERIAL.

TAKE CARE TO FULLY COMPACT HAUNCH ZONE OF PIPE BACKFILL.

LOOSELY PLACED SELECT MATERIAL CLASS III OR CLASS II, TYPE 1 FOR PIPE BEDDING. LEAVE SECTION DIRECTLY BENEATH PIPE UNCOMPACTED AS PIPE SEATING AND BACKFILL WILL ACCOMPLISH COMPACTION.

DO NOT OPERATE HEAVY EQUIPMENT OVER ANY PIPE CULVERT UNTIL THE PIPE CULVERT HAS BEEN PROPERLY BACKFILLED AND COVERED WITH AT LEAST 3 FEET OF APPROVED MATERIAL.

REFER TO NCDOT PIPE MATERIAL SELECTION GUIDE AND STANDARD SPECIFICATIONS FOR ALLOWABLE PIPE FILL HEIGHTS AND PIPE SPECIFICATIONS.

SPRINGLINE OF PIPE

SELECT BACKFILL MATERIAL CLASS III OR CLASS II, BELOW SPRINGLINE.

UNDISTURBED EARTH MATERIAL

SELECT MATERIAL CLASS V OR VI FOR FOUNDATION CONDITIONING. ENCAPSULATE WITH TYPE IV GEOTEXTILE AS DIRECTED BY THE ENGINEER.

STATE OF NORTH CAROLINA
DEPT. OF TRANSPORTATION
DIVISION OF HIGHWAYS
RALEIGH, N.C.

ROADWAY DETAIL DRAWING FOR
METHOD OF PIPE INSTALLATION
RIGID PIPE

SHEET 2 OF 2
300.01

6/2/2026 | 12:47:11 PM PDT

NORTH CAROLINA PROFESSIONAL SEAL 033144 ENGINEER NICOLE M. HACKLER

Signed by: Nicole M. Hackler
5884323D341664C5...

DOCUMENT NOT CONSIDERED FINAL UNLESS ALL SIGNATURES COMPLETED

CONTRACTS STANDARDS AND DEVELOPMENT UNIT
Office 919-707-6950 FAX 919-250-4119

SEE TITLE BLOCK

ORIGINAL BY: S.CALHOUN DATE: 7-25-2024
MODIFIED BY: DATE:
CHECKED BY: DATE:
FILE SPEC.:

Docusign Envelope ID: 426BC4E7-9E31-8FEC-82B3-E00BDE3EE578

PROJECT REFERENCE NO.	SHEET NO.
U-4700CB	2C-3

NOTES:

CONSTRUCT STANDARD SIDEWALK 5' WIDE AND 4" THICK UNLESS OTHERWISE DENOTED ON PLANS.

PLACE A GROOVE JOINT 1" DEEP WITH ⅛" RADII IN THE CONCRETE SIDEWALK AT 5' INTERVALS. ONE ½" EXPANSION JOINT WILL BE REQUIRED AT 50' INTERVALS. A ½" EXPANSION JOINT WILL BE REQUIRED WHERE THE SIDEWALK JOINS ANY RIGID STRUCTURE.

SEE STD. DWG. 848.06 FOR CURB RAMP LOCATION REQUIREMENTS AND CONSTRUCTION GUIDELINES.

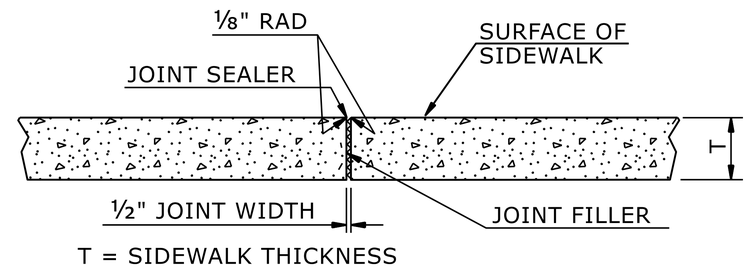

TRANSVERSE EXPANSION JOINT IN SIDEWALK

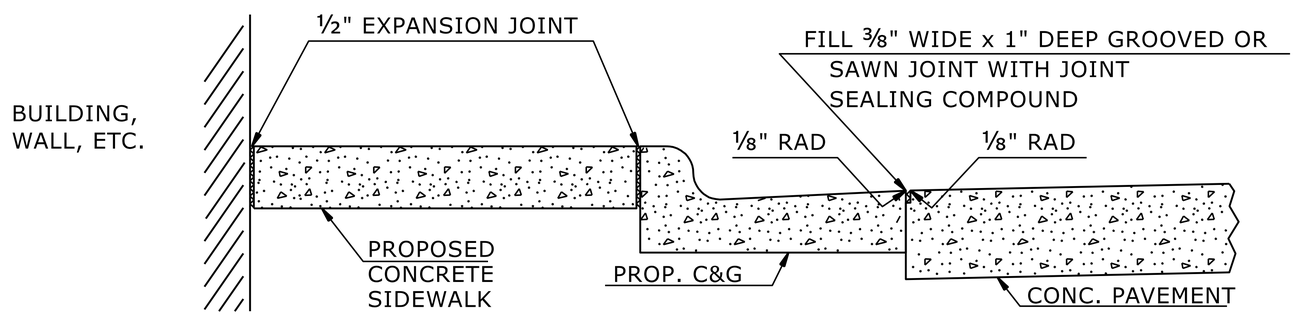

DETAILS SHOWING JOINTS IN CONCRETE SIDEWALK

STATE OF NORTH CAROLINA
DEPT. OF TRANSPORTATION
DIVISION OF HIGHWAYS
RALEIGH, N.C.

ROADWAY DETAIL DRAWING FOR
CONCRETE SIDEWALK

SHEET 1 OF 1

848D01

6/2/2026 | 12:47:11 PM PDT

NORTH CAROLINA PROFESSIONAL SEAL 033144 ENGINEER NICOLE M. HACKLER

Signed by: Nicole M. Hackler
5884323D34164C5...

DOCUMENT NOT CONSIDERED FINAL UNLESS ALL SIGNATURES COMPLETED

CONTRACTS STANDARDS AND DEVELOPMENT UNIT
Office 919-707-6950 FAX 919-250-4119

SEE TITLE BLOCK

ORIGINAL BY: S.CALHOUN DATE: 7-25-2024
MODIFIED BY: DATE:
CHECKED BY: DATE:
FILE SPEC.:

Docusign Envelope ID: 426BC4E7-9E31-8FEC-82B3-E00BDE3EE578

PROJECT REFERENCE NO.	SHEET NO.
U-4700CB	2C-4

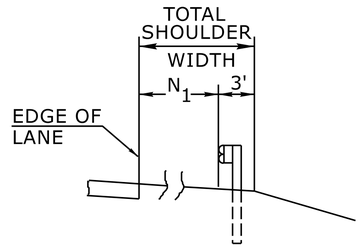

FILL SECTION

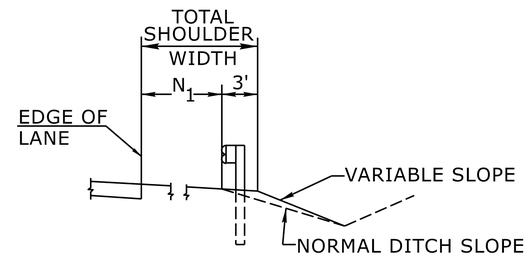

CUT SECTION

"N_1"= DISTANCE FROM EDGE OF LANE TO FACE OF GUARDRAIL WHERE GUARDRAIL IS PARALLEL TO LANE.

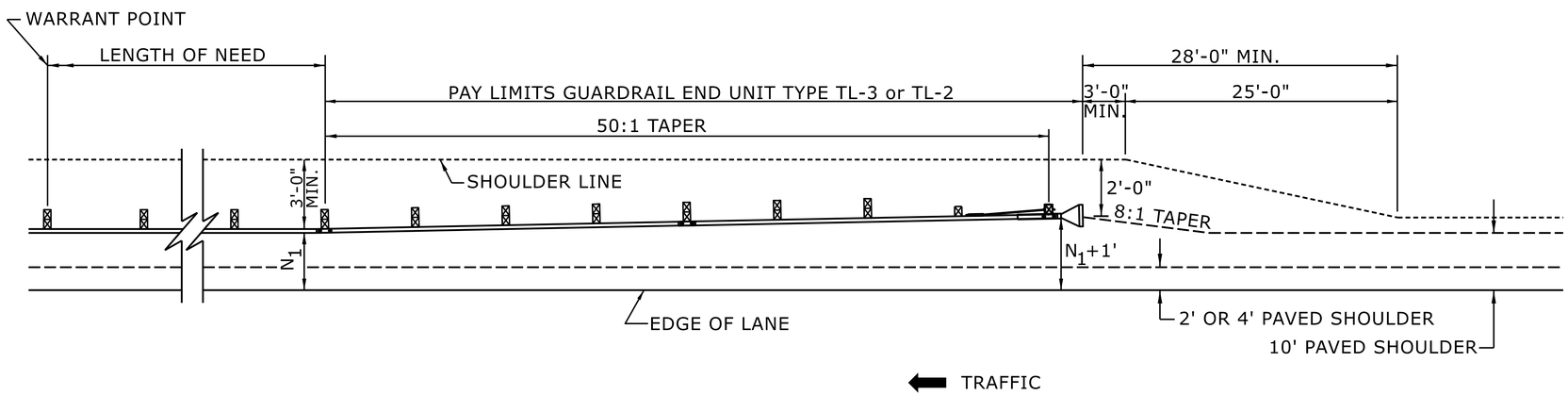

FOR POSTED SPEEDS ≥ 45mph USE GREU TYPE TL-3
FOR POSTED SPEEDS < 45mph USE GREU TYPE TL-2

DETAIL OF BEGINNING OF GUARDRAIL IN CUT OR FILL SECTION

STATE OF
NORTH CAROLINA
DEPT. OF TRANSPORTATION
DIVISION OF HIGHWAYS
RALEIGH, N.C.

ROADWAY DETAIL DRAWING FOR
GUARDRAIL PLACEMENT

SHEET 6 OF 15

862D01

6/2/2026 | 12:47:11 PM PDT

NORTH CAROLINA PROFESSIONAL SEAL 033144 ENGINEER NICOLE M. HACKLER

Signed by:
Nicole M. Hackler
5884323D34164C5...

DOCUMENT NOT CONSIDERED FINAL
UNLESS ALL SIGNATURES COMPLETED

**CONTRACTS STANDARDS
AND DEVELOPMENT UNIT**
Office 919-707-6950 FAX 919-250-4119

SEE TITLE BLOCK

ORIGINAL BY: S.CALHOUN DATE: 7-25-2024
MODIFIED BY: DATE:
CHECKED BY: DATE:
FILE SPEC.:

Docusign Envelope ID: 426BC4E7-9E31-8FEC-82B3-E00BDE3EE578

PROJECT REFERENCE NO.	SHEET NO.
U-4700CB	2C-5

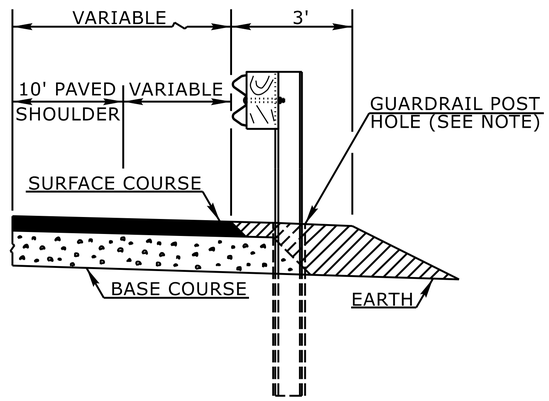

FLEXIBLE PAVED SHOULDER

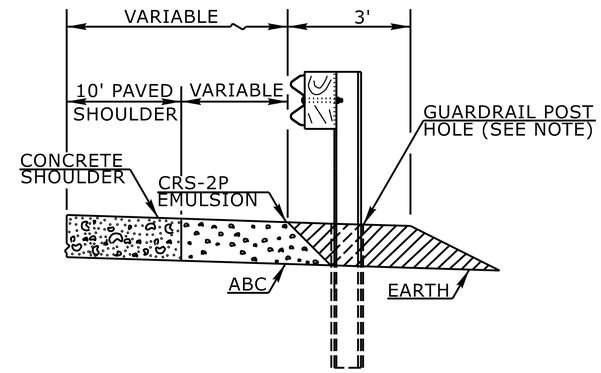

CONCRETE PAVED SHOULDER

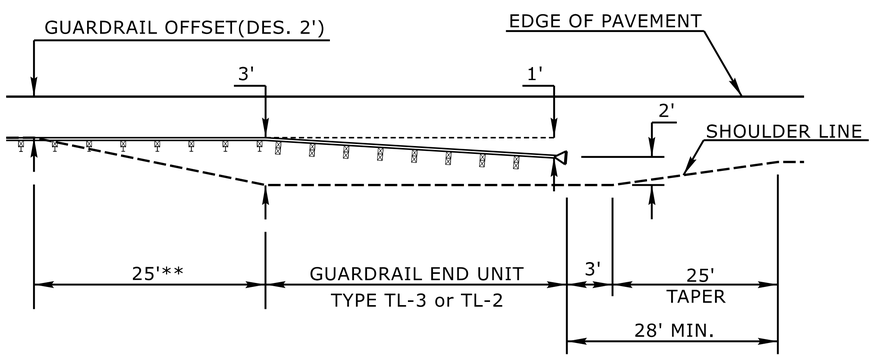

8' GUARDRAIL POST ON 2:1 SLOPE-END UNIT TRANSITION*
PLAN VIEW

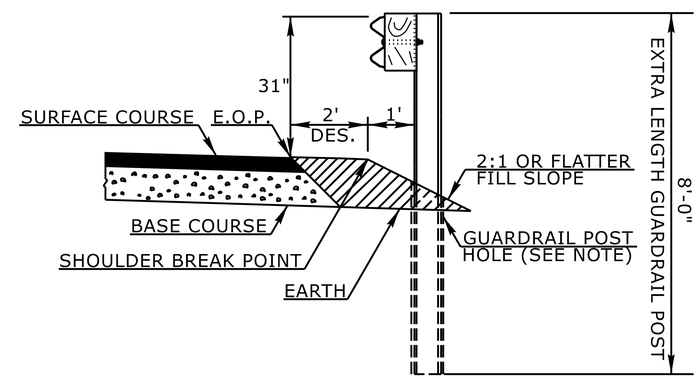

8' GUARDRAIL POST ON 2:1 SLOPE*

* THE 8' GUARDRAIL POST ON 2:1 SLOPE DETAIL IS INTENDED FOR USE ONLY IN SEVERELY CONSTRAINED AREAS WITH A POSTED SPEED ≤ 60 MPH. GUARDRAIL END UNITS MAY NOT BE PLACED ON THE 2:1 SLOPE AND MUST TRANSITION TO THE SHOULDER.
** 8' GUARDRAIL POST SHOULD BE USED IN THIS RANGE

NOTE:
WHEN WOODEN GUARDRAIL POSTS ARE USED, DRILL HOLES THROUGH EARTH MATERIAL AND BASE COURSE.THE POST MAY THEN BE DRIVEN TO THE PROPER DEPTH. DRILL THE HOLE OF SUFFICIENT SIZE TO ACCOMMODATE THE PARTICULAR POST BEING USED. BACKFILL AND TAMP HOLES USING THE EXCAVATED MATERIAL.

STATE OF
NORTH CAROLINA
DEPT. OF TRANSPORTATION
DIVISION OF HIGHWAYS
RALEIGH, N.C.

ROADWAY DETAIL DRAWING FOR
GUARDRAIL PLACEMENT

SHEET 11OF 15

862D01

6/2/2026 | 12:47:11 PM PDT

NORTH CAROLINA PROFESSIONAL SEAL 033144 ENGINEER NICOLE M. HACKLER

Signed by:
Nicole M. Hackler
5884323D34164C5...

DOCUMENT NOT CONSIDERED FINAL
UNLESS ALL SIGNATURES COMPLETED

CONTRACTS STANDARDS AND DEVELOPMENT UNIT
Office 919-707-6950 FAX 919-250-4119

SEE TITLE BLOCK

ORIGINAL BY:	L.SMITH	DATE:	10-14-2025
MODIFIED BY:		DATE:	
CHECKED BY:		DATE:	
FILE SPEC.:			

Docusign Envelope ID: 426BC4E7-9E31-8FEC-82B3-E00BDE3EE578

PROJECT REFERENCE NO.	SHEET NO.
U-4700CB	2C-6

PLACE APPROVED BICYCLE FRIENDLY RAILINGS, FENCE, OR RUB RAILS IF SIDEPATH/SHARED-USE PATH IS LOCATED LESS THAN 4 FEET FROM THE POST

SEE THE ROADWAY DESIGN MANUAL (PART I CHAPTER 4 SECTION 4.14) FOR OFFSET DISTANCES FROM FACE OF GUARDRAIL AND BACK OF GUARDRAIL TO SIDEWALK OR SIDEPATH/SHARED-USE PATH

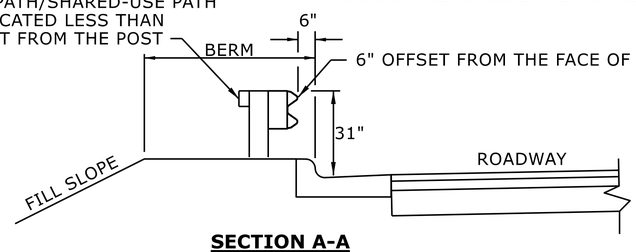

SECTION A-A

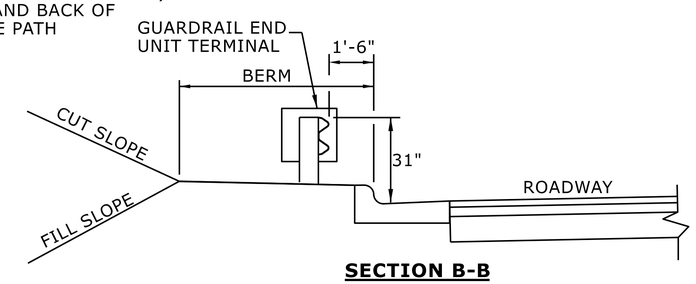

SECTION B-B

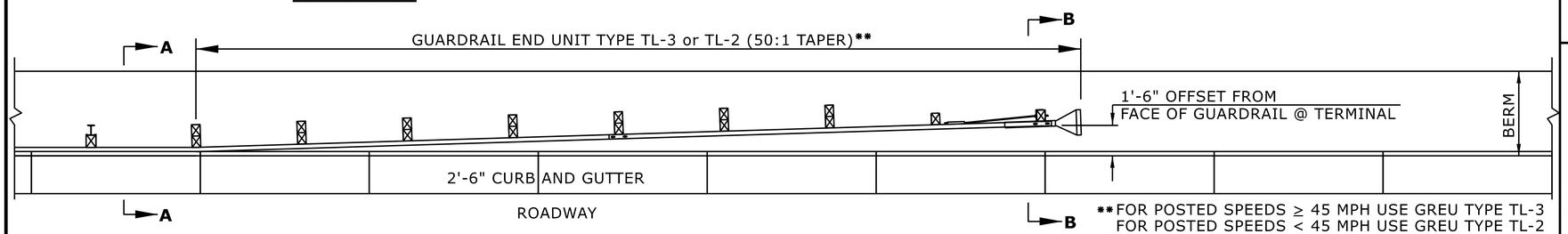

GUARDRAIL 6" FROM THE FACE OF CURB

** FOR POSTED SPEEDS ≥ 45 MPH USE GREU TYPE TL-3
FOR POSTED SPEEDS < 45 MPH USE GREU TYPE TL-2

BICYCLE FRIENDLY RAILINGS, FENCE OR RUB RAIL SHOULD NOT BE PLACED WITHIN THE LIMITS OF THE STRUCTURAL ANCHOR OR END UNITS

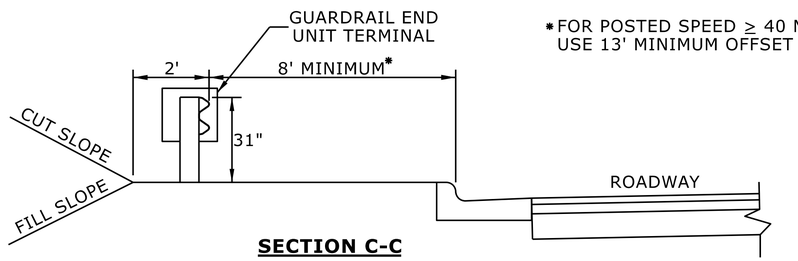

SECTION C-C

* FOR POSTED SPEED ≥ 40 MPH USE 13' MINIMUM OFFSET

SEE THE ROADWAY DESIGN MANUAL (PART I CHAPTER 4 SECTION 4.14) FOR OFFSET DISTANCES FROM FACE OF GUARDRAIL AND BACK OF GUARDRAIL TO SIDEWALK OR SIDEPATH/SHARED-USE PATH

** FOR POSTED SPEEDS ≥ 45 MPH USE GREU TYPE TL-3
FOR POSTED SPEEDS < 45 MPH USE GREU TYPE TL-2

BICYCLE FRIENDLY RAILINGS, FENCE OR RUB RAIL SHOULD NOT BE PLACED WITHIN THE LIMITS OF THE STRUCTURAL ANCHOR OR END UNITS

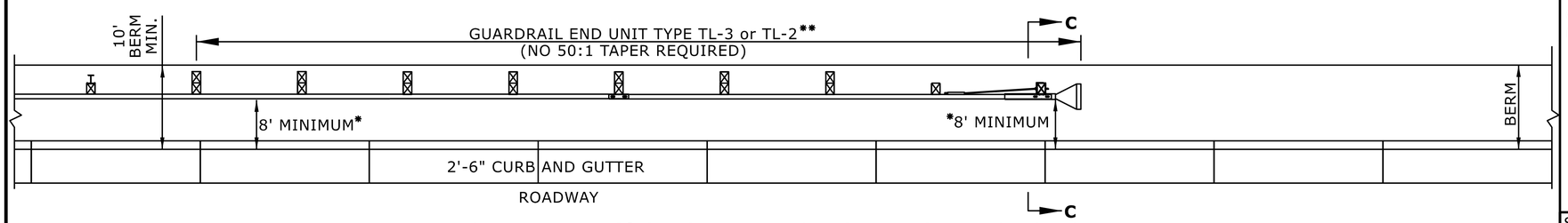

GUARDRAIL 8' OR GREATER OFFSET FROM FACE OF CURB

STATE OF
NORTH CAROLINA
DEPT. OF TRANSPORTATION
DIVISION OF HIGHWAYS
RALEIGH, N.C.

ROADWAY DETAIL DRAWING FOR
GUARDRAIL PLACEMENT
GUARDRAIL TREATMENT AT CURB AND GUTTER

SHEET 12 OF 15

862D01

6/2/2026 | 12:47:11 PM PDT

NORTH CAROLINA PROFESSIONAL SEAL 033144 ENGINEER NICOLE M. HACKLER

Signed by: Nicole M. Hackler
5884323D34164C5...

DOCUMENT NOT CONSIDERED FINAL UNLESS ALL SIGNATURES COMPLETED

CONTRACTS STANDARDS AND DEVELOPMENT UNIT
Office 919-707-6950 FAX 919-250-4119

SEE TITLE BLOCK

ORIGINAL BY: S.CALHOUN DATE: 7-25-2024
MODIFIED BY: DATE:
CHECKED BY: DATE:
FILE SPEC.:

Docusign Envelope ID: 426BC4E7-9E31-8FEC-82B3-E00BDE3EE578

PROJECT REFERENCE NO.	SHEET NO.
U-4700CB	2C-7

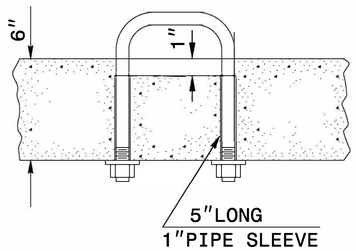

PARTIAL SECTION

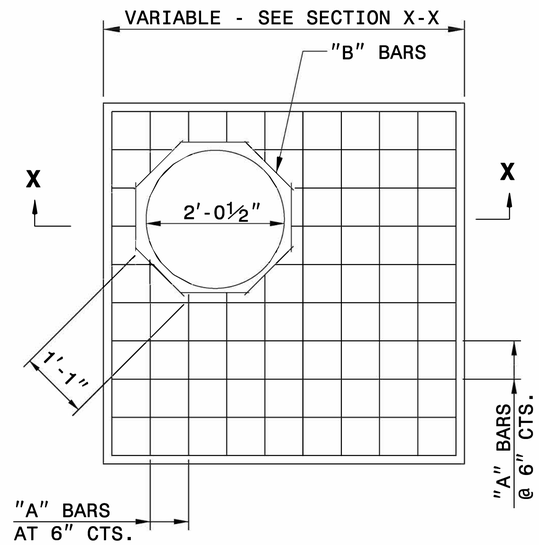

PLAN

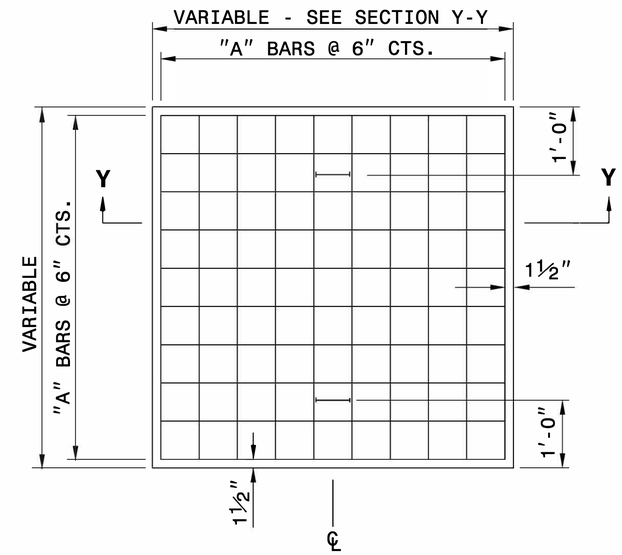

PLAN

GENERAL NOTES:

CONSTRUCT IN ACCORDANCE WITH SECTION 859 OF THE STANDARD SPECIFICATIONS.

THE DIMENSIONS FOR THE EXISTING BOXES ARE APPROXIMATE AND MAY VARY SLIGHTLY.

DETAIL INTENDED FOR NON-TRAFFIC BEARING DRAINAGE STRUCTURES.

BILL OF MATERIALS

REINFORCING STEEL				
CODE	SIZE	QTY.	LENGTH	REINF. STEEL LBS.
A	#4	20	4'-6"	60.12
B	#4	8	1'-1"	5.79
TOTAL				65.91 *

MASONRY	CU YDS
TOP SLAB CONCRETE CLASS "B"	.4326 *
BRICK MASONRY PER FT HT (MIN)	.4111

* NOTE:
QUANTITIES BASED ON 3'-6" X 3'-6" DRAINAGE STRUCTURE. ADJUST QUANTITIES FOR LARGER STRUCTURES AND MANHOLE CONSTRUCTION.

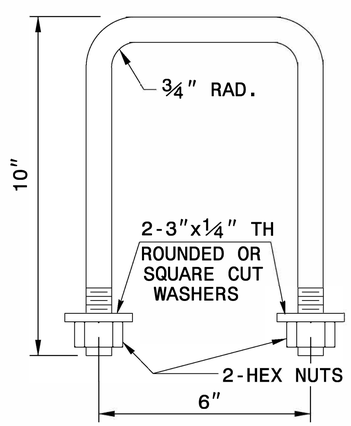

DETAIL OF HANDLE

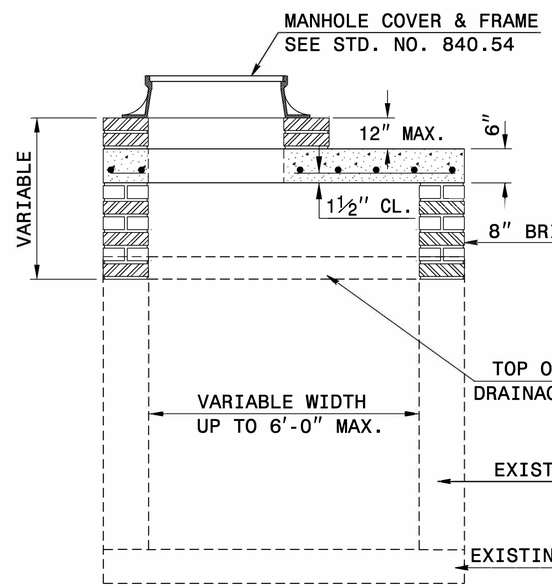

SECTION X-X

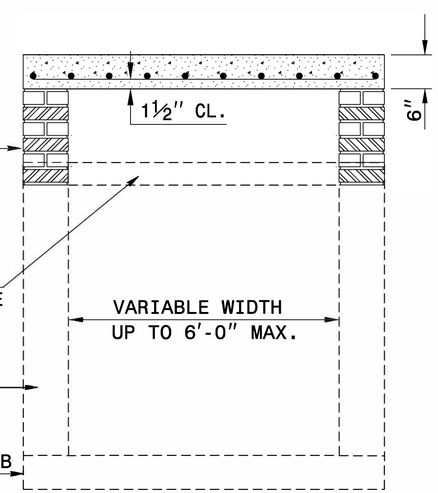

SECTION Y-Y

6/2/2026 | 12:47:11 PM PDT

NORTH CAROLINA PROFESSIONAL SEAL 33144 ENGINEER NICOLE M. HECKLER

Signed by: Nicole M. Heckler
5884323D34164C5...

DOCUMENT NOT CONSIDERED FINAL UNLESS ALL SIGNATURES COMPLETED

CONTRACT STANDARDS AND DEVELOPMENT UNIT
Office 919-707-6950 FAX 919-250-4119

DETAIL TO CONVERT EXISTING DI, CB, OTCB or GI TO JUNCTION BOX (MANHOLE OPTIONAL)

ORIGINAL BY: T.S.S. DATE: NOV.1997
MODIFIED BY: T.S.S. DATE: FEB.2000
CHECKED BY: DATE:
FILE SPEC.: ds174:/usr/details/stand/boxtojbe.dgn

Docusign Envelope ID: 426BC4E7-9E31-8FEC-82B3-E00BDE3EE578

PROJECT REFERENCE NO.	SHEET NO.
U-4700CB	2C-8

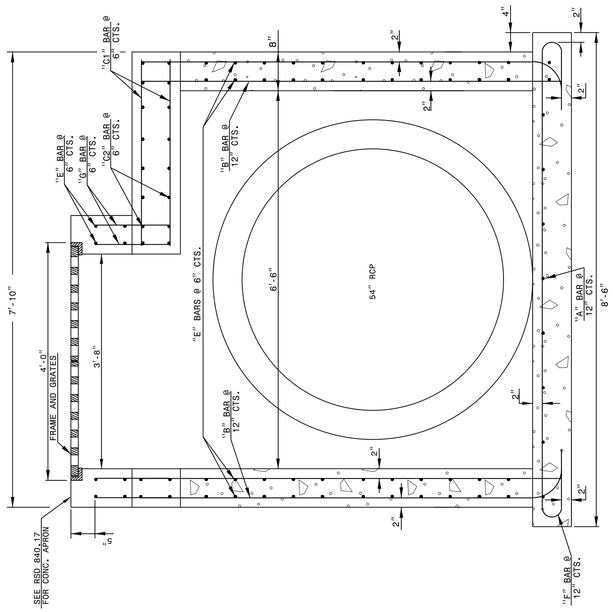

SECTION X-X

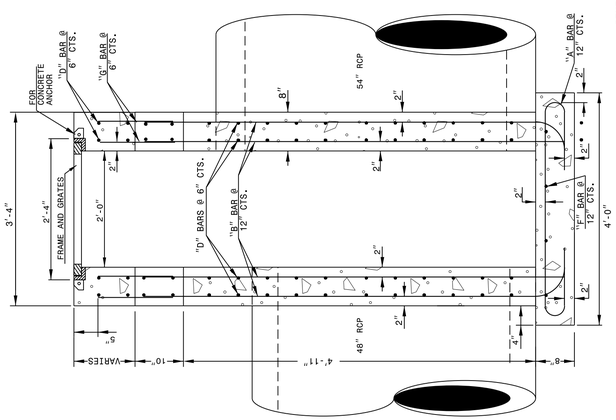

SECTION Y-Y

GENERAL NOTES:
-BUILD WITH CLASS 'AA' CONCRETE
-CHAMFER ALL EXPOSED CONCRETE CORNERS 3".
-USE FORMS TO CONSTRUCT THE BOTTOM SLAB.
-IF PIPES ARE SET IN THE BASE, FOLLOW CONSTRUCTION PROCEDURE SHOWN BY STD. DWG. 840.00.
-PRECAST UNITS CONCRETE MAY BE USED IN LIEU CAST IN PLACE CONCRETE.
-REFERENCE STD. DWG. 840.25 FOR FRAME ANCHORAGE.
-PROVIDE DOWEL NUTS OVER 3.45" DEEP WITH STEPS AS DIRECTED BY STD. DWG. 840.66.
-FRAME AND GRATES ARE SEPARATE CONTRACT ITEM.

NOTES:
-HORIZONTAL (UP TO 10' MAX. IN BOTH DIRECTIONS) AND VERTICAL (UP TO 20' MAX.) DIMENSIONS MAY BE ADJUSTED AS THE FIELD CONDITIONS AND/OR ALTERNATE DESIGNS DICTATE.
-ALL ADJUSTMENTS ARE TO BE MADE AS DIRECTED BY THE ENGINEER.

STATE OF NORTH CAROLINA DEPT. OF TRANSPORTATION DIVISION OF HIGHWAYS RALEIGH, N.C.	ENGLISH DETAIL DRAWING FOR **TRAFFIC BEARING GRATED INLET** FOR PIPES UP TO 54"	SHEET 1 OF 2 **840D35**

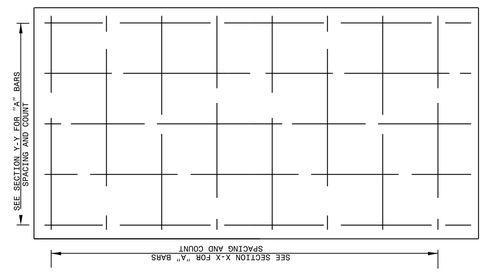

PLAN OF BASE

BILL OF MATERIALS

BAR	SIZE	LENGTH	QUANTITY	WEIGHT
A	#5	5'-0"	42	47
B	#5	7'-6"	104	780
C1	#5	3'-4"	9	32
C2	#5	3'-0"	6	19
D	#5	7'-6"	48	376
E	#5	3'-0"	48	151
F	#5	10'-0"	4	42
G	#5	1'-8"	104	181
REINF. STEEL (TOTAL WEIGHT LBS.)				1628
CONCRETE TOTAL (CU.YDS.) CLASS "AA"				5.1
NO DEDUCTIONS HAVE BEEN MADE TO ACCOMMODATE PIPES				

FOR EVERY 1 FOOT OF RISER USE 0.41 CU.YDS CONCRETE AND 390 LBS STEEL.

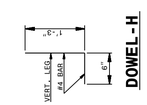

DOWEL-H

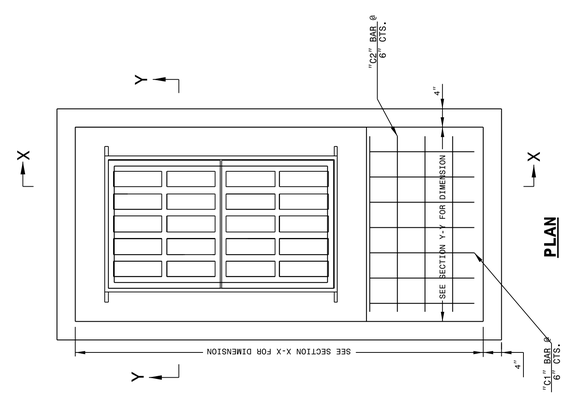

PLAN

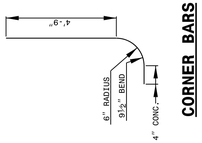

CORNER BARS

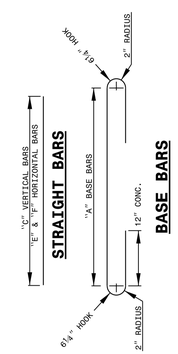

STRAIGHT BARS

BASE BARS

STATE OF NORTH CAROLINA DEPT. OF TRANSPORTATION DIVISION OF HIGHWAYS RALEIGH, N.C.	ENGLISH DETAIL DRAWING FOR **TRAFFIC BEARING GRATED INLET** FOR PIPES UP TO 54"	SHEET 2 OF 2 **840D35**

6/2/2026 | 12:47:11 PM PDT

NORTH CAROLINA PROFESSIONAL SEAL 33144 ENGINEER NICOLE M. HACKLER

Signed by: Nicole M. Hackler
5884323D34164C5...

DOCUMENT NOT CONSIDERED FINAL UNLESS ALL SIGNATURES COMPLETED

CONTRACT STANDARDS AND DEVELOPMENT UNIT
Office 919-707-6950 FAX 919-250-4119

SEE PLATE FOR TITLE

ORIGINAL BY: K. KEMPF DATE: 03-03-2015
MODIFIED BY: DATE:
CHECKED BY: DATE:
FILE SPEC.: jhowerton/840d35 TBDI Up to 54in.dgn

13-AUG-2018 09:00
S:\Contracts\Contracts\Special Details\jhowerton\840d35 TBDI Up to 54in.dgn
jhowerton AT CSD-292595

Docusign Envelope ID: 426BC4E7-9E31-8FEC-82B3-E00BDE3EE578

5/14/99

PROJECT REFERENCE NO.	SHEET NO.
U-4700CB	2C-9

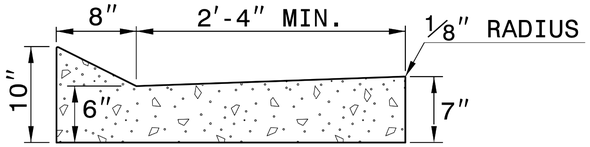

SHOULDER BERM GUTTER

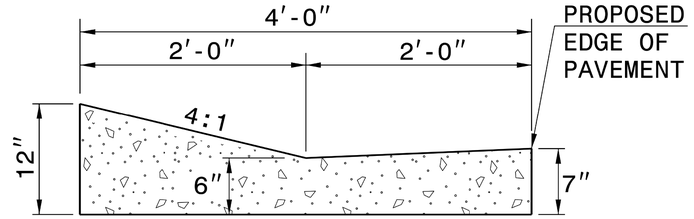

EXPRESSWAY GUTTER

NOTE: SEE STD. DWG. 846.01 FOR ADDITIONAL CURB AND GUTTER INFORMATION.

SEE ROADWAY PLANS FOR LOCATION OF CURB TRANSITION.

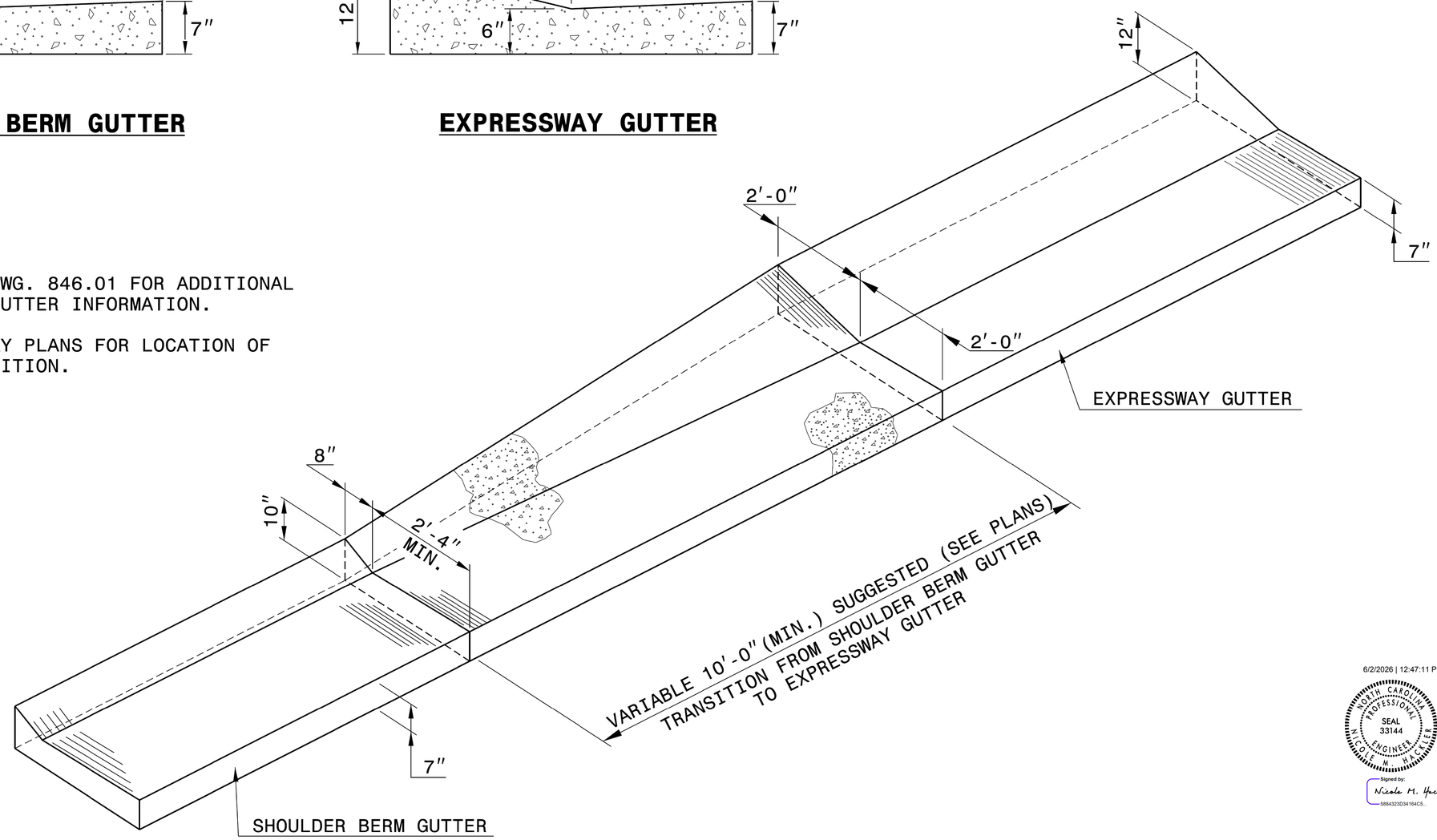

ISOMETRIC VIEW OF TRANSITION

6/2/2026 | 12:47:11 PM PDT

NORTH CAROLINA PROFESSIONAL SEAL 33144 ENGINEER NICOLE M. HECKLER

Signed by: Nicole M. Heckler
5884323D34164C5...

DOCUMENT NOT CONSIDERED FINAL UNLESS ALL SIGNATURES COMPLETED

CONTRACT STANDARDS AND DEVELOPMENT UNIT
Office 919-707-6950 FAX 919-250-4119

DETAIL OF SHOULDER BERM GUTTER TO EXPRESSWAY GUTTER TRANSITION SECTION

ORIGINAL BY: T.S.Spell DATE: 8-13-02
MODIFIED BY: DATE:
CHECKED BY: DATE:
FILE SPEC.: w:usr/details/stand/cgtransit.dgn

04-JUN-2019 10:25
S:\Contracts\Contracts\Special Details\eriewardlusr\details\stand\c&g transition sections.dgn
jhowerton AT CSD-292595

12/06/07

PROJECT REFERENCE NO.	SHEET NO.
U-4700CB	3B-1

Johnson, Mirmiran, & Thompson Inc.
4700 Falls of Neuse Rd, Suite 100,
Raleigh, NC, 27609
License No: C-3097

SUMMARY OF EARTHWORK

IN CUBIC YARDS

Station	Station	Uncl. Excav.	Undercut	Embank. +%	Borrow	Waste
-L- Sta. 593+50.00 LT	-L- Sta. 662+47.07 LT	7,225	346	5,142	0	2,429
SUBTOTAL		7,225	346	5,142	0	2,429
-L- Sta. 593+50.00 RT	-L- Sta. 662+47.07 RT	4,327	754	6,011	930	0
SUBTOTAL		4,327	754	6,011	930	0
Y38SW Sta. 10+30.00	Y38SW Sta. 17+98.08	232	0	306	74	0
SUBTOTAL		232	0	306	74	0
Y38NE Sta. 19+39.11	Y38NE Sta. 25+50.00	886	400	1,574	288	0
SUBTOTAL		886	400	1,574	288	0
TOTAL		12,670	1,500	13,033	1,292	2,429
MATERIAL FOR SHOULDER CONSTRUCTION				1,668	1,668	
LOSS DUE TO CLEARING &GRUBBING		-710				-710
WASTE IN LIEU OF BORROW					-1,719	-1,719
ADDITIONAL CONTINGENT UNDERCUT			1,150	1,035	1,035	1,150
PROJECT TOTAL:		11,960	2,650	15,736	2,276	1,150
EST. 5% REPLACE TOPSOIL ON BORROW PIT					114	
GRAND TOTAL:		11,960	2,650		2,390	1,150
SAY:		**12,000**	**2,650**		**2,400**	

DRAINAGE DITCH EXCAVATION = 100 CY

UNCLASSIFIED EXCAVATION – ACCEPTABLE, BUT NOT TO BE USED IN THE TOP 3 FT OF EMBANKMENT OR BACKFILL -L- 597+75 TO 599+75 325 CY

Note: Approximate quantities only. Unclassified Excavation, Borrow Excavation, Fine Grading, Clearing and Grubbing and Removal of Exist. Asphalt Pavement will be paid for at the contract lump sum price for grading.

PAVEMENT REMOVAL SUMMARY

IN SQUARE YARDS

SURVEY LINE	Station	Station	LOCATION LT/RT/CL	ASPHALT REMOVAL	ASPHALT BREAKUP	CONCRETE REMOVAL	CONCRETE BREAKUP
-L-	593+50	606+58	RT	1231.56			
-L-	608+00	612+88	RT	491.78			
-L-	612+88	616+60	RT	536.33			
-L-	616+60	622+47	RT	701.44			
-L- RT INSIDE	593+50	606+72		1158.78			
-L-	606+72	613+25		1120.78			
-L- RT INSIDE	613+21	622+47		372.89			
-L- LT INSIDE	593+50	606+71		376.04			
-L- LT INSIDE	613+25	622+47		249.32			
-L-	593+50	606+50	LT	1308.05			
-L-	607+77	613+25	LT	305.45			
-L-	616+62	622+47	LT	260.92			
-Y38NE-	19+41	25+50		3394.02			
-Y38SW-	11+00	11+81	LT	159.52			
-Y38SW-	11+95	17+31		476.06			
-Y38SW-	12+94	14+30	RT	14.49			
-Y38SW-	14+86	15+45	RT	30.25			
-Y38SW-	15+00	16+08		489.56			
-Y38SW-	16+08	17+98		575.73			
		TOTAL:		13252.97			
		SAY:		**13,260**			

SUMMARY OF CHAIN LINK FENCE,48" FABRIC

STATION TO STATION	LT. OR RT.	A FABRIC L.F.	B END BRACE	C CORNER BRACE	D LINE BRACE	E LINE POSTS	F TERMINAL POSTS	G DOUBLE GATE POSTS
592+63.93 to 597+55.84	RT.	1622.13	2	10	11	138.34	23	2
TOTAL		1622.13				138.34	23	2
SAY		**1623.00**				**139.00**	**23.00**	**2.00**

COMPUTED BY: *Joshua Roemer, PE* **DATE:** *2/21/2023*

CHECKED BY: *Keith Bridgers* **DATE:** *3-2-2026*

DIVISION OF HIGHWAYS
STATE OF NORTH CAROLINA

GUARDRAIL SUMMARY

"N" = DISTANCE FROM EDGE OF LANE TO FACE OF GUARDRAIL
TOTAL SHOULDER WIDTH = DISTANCE FROM EDGE OF TRAVEL LANE TO SHOULDER BREAK POINT.
FLARE LENGTH = DISTANCE FROM LAST SECTION OF PARALLEL GUARDRAIL TO END OF GUARDRAIL
W = TOTAL WIDTH OF FLARE FROM BEGINNING OF TAPER TO END OF GUARDRAIL

G = GATING IMPACT ATTENUATOR TYPE 350
NG = NON-GATING IMPACT ATTENUATOR TYPE 350

SURVEY LINE	BEG. STA.	END STA.	LOCATION	LENGTH STRAIGHT	LENGTH SHOP CURVED	LENGTH DOUBLE FACED	WARRANT POINT APPROACH END	WARRANT POINT TRAILING END	"N" DIST. FROM E.O.L.	TOTAL SHOUL WIDTH	FLARE LENGTH APPROACH END	FLARE LENGTH TRAILING END	W APPROACH END	W TRAILING END	ANCHORS Type III	ANCHORS B-77	ANCHORS GREU, TL-3	ANCHORS GREU, TL-2	ANCHORS CAT-1	ANCHORS AT-1	ANCHORS Type III SC	ANCHORS B-77 SC		IMPACT ATTENUATOR G	IMPACT ATTENUATOR NG	SINGLE FACED CONCRETE BARRIER	REMOVE EXISTING GUARDRAIL	REMOVE & STOCKPILE EXISTING GUARDRAIL	REMARKS
-L-	594+94.62	598+19.62	LT	325'			598+00.00	595+00.00	14'	17'	50'	0'	1'	0'			1		1								730'		
-L-	594+27.29	597+77.29	RT	237.5'	112.5'		594+50.00	597+50.00	10'	13'	50'	0'	1'	0'			1		1										
-L-/RPA	617+41.5/ 5+00	7+03.45	RT	275'			617+00.00	7+03.45	8'	11'	50'	0'	1'	0'			1		1										
Y38SW/L	17+57.16	606+03/ 18+07	RT		87.5'		17+57.16	18+07	10'	13'	25'	0'	0.5'	0'				1	1										
			TOTAL	837.5'	200'												3	1	4										
		ANCHOR DEDUCTIONS																											
			GREU TL-2: 1 @ 25'	-25'																									
			CAT-1: 4 @ 6.25'	-25.00'																									
			GREU TL-3: 3 @ 50'	-150'																									
			GRAND TOTAL	637.50'	200'												3	1	4								730'		
			SAY:	**650'**	200'												**3**	1	**4**								**730'**		
			ADDITIONAL POSTS:	5																									

6/22/2026 7:51:10 PM
r:\roadway\proj\4700cb_rdy_psh_3b-1.dgn
$$$$USERNAME$$$$

CNC2516L

COMPUTED BY:	OJS	DATE:	05/29/2026
CHECKED BY:	KPH	DATE:	05/29/2026

NORTH CAROLINA DEPARTMENT OF TRANSPORTATION
DIVISION OF HIGHWAYS

PROJECT NO.	SHEET NO.
U-4700 CB	3D-1

Note: Invert Elevations indicated are for Bid Purposes only and shall not be used for project construction stakeout. See "Standard Specifications For Roads and Structures, Section 300-5".

LIST OF PIPES, ENDWALLS, ETC. (FOR PIPES 48 INCHES & UNDER)

| LINE & STATION / SIZE / THICKNESS OR GAUGE | OFFSET | STRUCTURE NUMBER FROM | STRUCTURE NUMBER TO | TOP ELEVATION FT. | INVERT ELEVATION FT. | INVERT ELEVATION FT. | MINIMUM REQUIRED SLOPE % | Side Drain Pipe (RCP, CSP, CAAP, HDPE, PVC, or PP PIPE) 12 | 15 | 18 | 24 | 30 | 36 | 42 | 48 | DO NOT USE RCP | DO NOT USE CSP | DO NOT USE CAAP | DO NOT USE HDPE | DO NOT USE PVC | DO NOT USE PP PIPE | C. S. PIPE 12 .064 | 15 .064 | 18 .064 | 24 .064 | 30 .079 | 36 .079 | 42 .109 | 48 .109 | R. C. PIPE CLASS III 12 | 15 | 18 | 24 | 30 | 36 | 42 | 48 | ENDWALLS STD. 838.01 OR STD. 838.11 (UNLESS NOTED OTHERWISE) CY | REINFORCED ENDWALLS CY | DRAINAGE STRUCTURE MASONRY CY | QUANTITIES FOR DRAINAGE STRUCTURES (NOTE: TOTAL LIN. FT. FOR PAY QUANTITY SHALL BE A + (1.3 X B)) A: 0' THRU 5' EACH | A: 5' THRU 10' LIN. FT. | B: 10' AND ABOVE LIN. FT. | C.B. STD. 840.01 OR STD. 840.02 | FRAME, GRATES, AND HOOD STD. 840.03 GRATE TYPE E | F | G | CONCRETE TRANSITIONAL SECTION D.I. STD. 852.06 OR STD. 852.04 | C.B. STD. 852.05 | OPEN THROAT C.B. STD. 840.04 OR STD. 840.05 | CONCRETE BRIDGE APPROACH D.I. STD. 840.13 | D.I. STD. 840.14 OR STD. 840.15 | D.I. FRAME AND GRATES STD. 840.16 | G.D.I. TYPE "A" STD. 840.17 OR STD. 840.26 | G.D.I. TYPE "B" STD. 840.18 OR STD. 840.27 | G.D.I. TYPE "D" STD. 840.19 OR STD. 840.28 | G.D.I. (W.S. FLAT) FRAME WITH GRATE STD. 840.20 | G.D.I. (W.S. FLAT) FRAME W/ 2 GRATES STD. 840.20 | G.D.I. (W.S. SAG) FRAME W/ GRATE STD. 840.22 | G.D.I. (W.S. SAG) FRAME W/ 2 GRATES STD. 840.22 | G.D.I. (N.S. SAG) FRAME W/ GRATE STD. 840.24 | G.D.I. (N.S. SAG) FRAME W/ 2 GRATES STD. 840.24 | G.D.I. (N.S. FLAT) FRAME W/ GRATE STD. 840.29 | G.D.I. (N.S. FLAT) FRAME W/ 2 GRATES STD. 840.29 | DRIVEWAY D.I. STD. 840.30 | FRAME W/ GRATE FOR DRIVEWAY STD. 840.30 | J.B. STD. 840.31 OR STD. 840.32 | ANGLED VANE GRATES AND FRAMES STD. 840.33 | T.B.J.B. STD. 840.34 | T.B.D.I. STD. 840.35 | T.B.D.I. FOR STEEL GRATES STD. 840.36 | STEEL FRAME WITH TWO GRATES STD. 840.37 | TEMP STEEL PLATE COVER MASONRY DRAINAGE | SPRING BOX STD. 840.41 | M.H. STD. 840.51, STD. 840.52, OR STD. 840.53 | M.H. FRAME AND COVER STD. 840.54 | CONVERT EXISTING C.B. TO J.B. WITH MANHOLE | CONVERT EXISTING D.I. TO J.B. WITH MANHOLE | ADJUST D.I. | FLOWABLE FILL CY | CONCRETE COLLARS CL. "B" STD. 840.72 CY | CONCRETE AND BRICK PIPE PLUG STD. 840.71 CY | PIPE REMOVAL LIN. FT. | REMARKS |
|---|---|---|---

CNC2516L

COMPUTED BY:	OJS	DATE:	05/29/2026
CHECKED BY:	KPH	DATE:	05/29/2026

NORTH CAROLINA DEPARTMENT OF TRANSPORTATION
DIVISION OF HIGHWAYS

PROJECT NO.	SHEET NO.
U-4700 CB	3D- 2

Note: Invert Elevations indicated are for Bid Purposes only and shall not be used for project construction stakeout. See "Standard Specifications For Roads and Structures, Section 300-5".

LIST OF PIPES, ENDWALLS, ETC. (FOR PIPES 48 INCHES & UNDER)

| LINE & STATION / SIZE / THICKNESS OR GAUGE | OFFSET | STRUCTURE NUMBER FROM | STRUCTURE NUMBER TO | TOP ELEVATION FT. | INVERT ELEVATION FT. | INVERT ELEVATION FT. | MINIMUM REQUIRED SLOPE % | Side Drain Pipe (RCP, CSP, CAAP, HDPE, PVC, or PP PIPE) 12 | 15 | 18 | 24 | 30 | 36 | 42 | 48 | DO NOT USE RCP | DO NOT USE CSP | DO NOT USE CAAP | DO NOT USE HDPE | DO NOT USE PVC | DO NOT USE PP PIPE | C. S. PIPE 12 .064 | 15 .064 | 18 .064 | 24 .064 | 30 .079 | 36 .079 | 42 .109 | 48 .109 | R. C. PIPE CLASS III 12 | 15 | 18 | 24 | 30 | 36 | 42 | 48 | ENDWALLS STD. 838.01 OR STD. 838.11 (UNLESS NOTED OTHERWISE) CY | REINFORCED ENDWALLS CY | DRAINAGE STRUCTURE MASONRY CY | QUANTITIES FOR DRAINAGE STRUCTURES (NOTE: TOTAL LIN. FT. FOR PAY QUANTITY SHALL BE A + (1.3 X B)) A: 0' THRU 5' EACH | A: 5' THRU 10' LIN. FT. | A: 10' AND ABOVE LIN. FT. | C.B. STD. 840.01 OR STD. 840.02 | FRAME, GRATES, AND HOOD STD. 840.03 GRATE TYPE E | F | G | CONCRETE TRANSITIONAL SECTION D.I. STD. 852.04 OR STD. 852.06 | C.B. STD. 852.05 | OPEN THROAT C.B. STD. 840.04 OR STD. 840.05 | CONCRETE BRIDGE APPROACH D.I. STD. 840.13 | D.I. STD. 840.14 OR STD. 840.15 | D.I. FRAME AND GRATES STD. 840.16 | G.D.I. TYPE "A" STD. 840.17 OR STD. 840.26 | G.D.I. TYPE "B" STD. 840.18 OR STD. 840.27 | G.D.I. TYPE "D" STD. 840.19 OR STD. 840.28 | G.D.I. (W.S. FLAT) FRAME WITH GRATE STD. 840.20 | G.D.I. (W.S. FLAT) FRAME W/ 2 GRATES STD. 840.20 | G.D.I. (W.S. SAG) FRAME W/ GRATE STD. 840.22 | G.D.I. (W.S. SAG) FRAME W/ 2 GRATES STD. 840.22 | G.D.I. (N.S. SAG) FRAME W/ GRATE STD. 840.24 | G.D.I. (N.S. SAG) FRAME W/ 2 GRATES STD. 840.24 | G.D.I. (N.S. FLAT) FRAME W/ GRATE STD. 840.29 | G.D.I. (N.S. FLAT) FRAME W/ 2 GRATES STD. 840.29 | DRIVEWAY D.I. STD. 840.30 | FRAME W/ GRATE FOR DRIVEWAY STD. 840.30 | J.B. STD. 840.31 OR STD. 840.32 | ANGLED VANE GRATES AND FRAMES STD. 840.33 | T.B.J.B. STD. 840.34 | T.B.D.I. STD. 840.35 | T.B.D.I. FOR STEEL GRATES STD. 840.36 | STEEL FRAME WITH TWO GRATES STD. 840.37 | TEMP STEEL PLATE COVER MASONRY DRAINAGE | SPRING BOX STD. 840.41 | M.H. STD. 840.51, STD. 840.52, OR STD. 840.53 | M.H. FRAME AND COVER STD. 840.54 | CONVERT EXISTING C.B. TO J.B. WITH MANHOLE | CONVERT EXISTING D.I. TO J.B. WITH MANHOLE | ADJUST D.I. | FLOWABLE FILL CY | CONCRETE COLLARS CL. "B" STD. 840.72 CY | CONCRETE AND BRICK PIPE PLUG STD. 840.71 CY | PIPE REMOVAL LIN. FT. | REMARKS |
|---|---|---|---

CNC2516L

COMPUTED BY:	OJS	DATE:	05/29/2026
CHECKED BY:	KPH	DATE:	05/29/2026

NORTH CAROLINA DEPARTMENT OF TRANSPORTATION
DIVISION OF HIGHWAYS

PROJECT NO.	SHEET NO.
U-4700 CB	3D-3

Note: Invert Elevations indicated are for Bid Purposes only and shall not be used for project construction stakeout. See "Standard Specifications For Roads and Structures, Section 300-5".

LIST OF PIPES, ENDWALLS, ETC. (FOR PIPES 48 INCHES & UNDER)

| LINE & STATION / SIZE / THICKNESS OR GAUGE | OFFSET | STRUCTURE NUMBER FROM | STRUCTURE NUMBER TO | TOP ELEVATION FT. | INVERT ELEVATION FT. | INVERT ELEVATION FT. | MINIMUM REQUIRED SLOPE % | Side Drain Pipe (RCP, CSP, CAAP, HDPE, PVC, or PP PIPE) 12 | 15 | 18 | 24 | 30 | 36 | 42 | 48 | DO NOT USE RCP | DO NOT USE CSP | DO NOT USE CAAP | DO NOT USE HDPE | DO NOT USE PVC | DO NOT USE PP PIPE | C. S. PIPE 12 | 15 | 18 | 24 | 30 | 36 | 42 | 48 | R. C. PIPE CLASS III 12 | 15 | 18 | 24 | 30 | 36 | 42 | 48 | ENDWALLS STD. 838.01 OR STD. 838.11 (UNLESS NOTED OTHERWISE) CY | REINFORCED ENDWALLS CY | DRAINAGE STRUCTURE MASONRY CY | QUANTITIES FOR DRAINAGE STRUCTURES (NOTE: TOTAL LIN. FT. FOR PAY QUANTITY SHALL BE A + (1.3 X B)) A: 0' THRU 5' EACH | A: 5' THRU 10' LIN. FT. | B: 10' AND ABOVE LIN. FT. | C.B. STD. 840.01 OR STD. 840.02 | FRAME, GRATES, AND HOOD STD. 840.03 GRATE TYPE E | F | G | CONCRETE TRANSITIONAL SECTION D.I. STD. 852.04 OR STD. 852.06 | C.B. STD. 852.05 | OPEN THROAT C.B. STD. 840.04 OR STD. 840.05 | CONCRETE BRIDGE APPROACH D.I. STD. 840.13 | D.I. STD. 840.14 OR STD. 840.15 | D.I. FRAME AND GRATES STD. 840.16 | G.D.I. TYPE "A" STD. 840.17 OR STD. 840.26 | G.D.I. TYPE "B" STD. 840.18 OR STD. 840.27 | G.D.I. TYPE "D" STD. 840.19 OR STD. 840.28 | G.D.I. (W.S. FLAT) FRAME WITH GRATE STD. 840.20 | G.D.I. (W.S. FLAT) FRAME W/ 2 GRATES STD. 840.20 | G.D.I. (W.S. SAG) FRAME W/ GRATE STD. 840.22 | G.D.I. (W.S. SAG) FRAME W/ 2 GRATES STD. 840.22 | G.D.I. (N.S. SAG) FRAME W/ GRATE STD. 840.24 | G.D.I. (N.S. SAG) FRAME W/ 2 GRATES STD. 840.24 | G.D.I. (N.S. FLAT) FRAME W/ GRATE STD. 840.29 | G.D.I. (N.S. FLAT) FRAME W/ 2 GRATES STD. 840.29 | DRIVEWAY D.I. STD. 840.30 | FRAME W/ GRATE FOR DRIVEWAY STD. 840.30 | J.B. STD. 840.31 OR STD. 840.32 | ANGLED VANE GRATES AND FRAMES STD. 840.33 | T.B.J.B. STD. 840.34 | T.B.D.I. STD. 840.35 | T.B.D.I. FOR STEEL GRATES STD. 840.36 | STEEL FRAME WITH TWO GRATES STD. 840.37 | TEMP STEEL PLATE COVER MASONRY DRAINAGE | SPRING BOX STD. 840.41 | M.H. STD. 840.51, STD. 840.52, OR STD. 840.53 | M.H. FRAME AND COVER STD. 840.54 | CONVERT EXISTING C.B. TO J.B. WITH MANHOLE | CONVERT EXISTING D.I. TO J.B. WITH MANHOLE | ADJUST D.I. | FLOWABLE FILL CY | CONCRETE COLLARS CL. "B" STD. 840.72 CY | CONCRETE AND BRICK PIPE PLUG STD. 840.71 CY | PIPE REMOVAL LIN. FT. | REMARKS |
|---|---|---|---

CNC2516L

COMPUTED BY:	OJS	DATE:	05/29/2026
CHECKED BY:	KPH	DATE:	05/29/2026

NORTH CAROLINA DEPARTMENT OF TRANSPORTATION
DIVISION OF HIGHWAYS

PROJECT NO.	SHEET NO.
U-4700CB	3D - 4

Note: Invert Elevations indicated are for Bid Purposes only and shall not be used for project construction stakeout. See "Standard Specifications For Roads and Structures, Section 300-5".

LIST OF PIPES, ENDWALLS, ETC. (FOR PIPES 54 INCHES & OVER)

| LINE & STATION / SIZE / THICKNESS OR GAUGE | OFFSET | STRUCTURE NUMBER FROM | STRUCTURE NUMBER TO | TOP ELEVATION FT. | INVERT ELEVATION FT. | INVERT ELEVATION FT. | MINIMUM REQUIRED SLOPE % | R. C. PIPE CLASS III 54 | 60 | 66 | 72 | 78 | 84 | STRUCTURAL PLATE PIPE 60 | 66 | 72 | | | 66" WELDED STEEL PIPE 0.875" THICK, GRADE B IN SOIL | 66" WELDED STEEL PIPE 0.875" THICK, GRADE B NOT IN SOIL | ENDWALLS STD. 838.01 OR STD. 838.11 (UNLESS NOTED OTHERWISE) CY | REINFORCED ENDWALLS CY | DRAINAGE STRUCTURE MASONRY CY | QUANTITIES FOR DRAINAGE STRUCTURES (NOTE: TOTAL LIN. FT. FOR PAY QUANTITY SHALL BE A + (1.3 X B)) 0' THRU 5' EACH | A: 5' THRU 10' LIN. FT. | B: 10' AND ABOVE LIN. FT. | C.B. STD. 840.01 OR STD. 840.02 | FRAME, GRATES, AND HOOD STD. 840.03 GRATE TYPE E | F | G | CONCRETE TRANSITIONAL SECTION D.I. STD. 852.06 | C.B. STD. 852.05 | OPEN THROAT C.B. STD. 840.04 OR STD. 840.05 | CONCRETE BRIDGE APPROACH D.I. STD. 840.13 | D.I. STD. 840.14 OR STD. 840.15 | D.I. FRAME AND GRATES STD. 840.16 | G.D.I. TYPE "A" STD. 840.17 OR STD. 840.26 | G.D.I. TYPE "B" STD. 840.18 OR STD. 840.27 | G.D.I. TYPE "D" STD. 840.19 OR STD. 840.28 | G.D.I. (W.S. FLAT) FRAME WITH GRATE STD. 840.20 | G.D.I. (W.S. FLAT) FRAME W/ 2 GRATES STD. 840.20 | G.D.I. (W.S. SAG) FRAME W/ GRATE STD. 840.22 | G.D.I. (W.S. SAG) FRAME W/ 2 GRATES STD. 840.22 | G.D.I. (N.S. SAG) FRAME W/ GRATE STD. 840.24 | G.D.I. (N.S. SAG) FRAME W/ 2 GRATES STD. 840.24 | G.D.I. (N.S. FLAT) FRAME W/ GRATE STD. 840.29 | G.D.I. (N.S. FLAT) FRAME W/ 2 GRATES STD. 840.29 | DRIVEWAY D.I. STD. 840.30 | FRAME W/ GRATE FOR DRIVEWAY STD. 840.30 | J.B. STD. 840.31 OR STD. 840.32 | ANGLED VANE GRATES AND FRAMES STD. 840.33 | T.B.J.B. STD. 840.34 | T.B.D.I. STD. 840.35 | T.B.D.I. FOR STEEL GRATES STD. 840.36 | STEEL FRAME WITH TWO GRATES STD. 840.37 | TEMP STEEL PLATE COVER MASONRY DRAINAGE | SPRING BOX STD. 840.41 | M.H. STD. 840.51, STD. 840.52, OR STD. 840.53 | M.H. FRAME AND COVER STD. 840.54 | CONVERT EXISTING C.B. TO J.B. WITH MANHOLE | CONVERT EXISTING C.B. TO D.I. | CONVERT EXISTING D.I. TO J.B. WITH MANHOLE | CONVERT EXISTING J.B. TO D.I. | ADJUST C.B. | ADJUST D.I. | 15" C.S. ELBOW | 18" C.S. ELBOW | 24" C.S. ELBOW | 30" C.S. ELBOW | 36" C.S. ELBOW | BERM DITCH OUTLET STD. 850.10 (PER EACH) | BERM DITCH OUTLET STD. 850.11 (PER EACH) | MODIFIED CONC. FLUME | PREFORMED SCOUR HOLE (PER EACH) | ENERGY DISSIPATION BASIN | FLOWABLE FILL CY | CONCRETE COLLARS CL. "B" STD. 840.72 CY | CONCRETE AND BRICK PIPE PLUG STD. 840.71 CY | PIPE REMOVAL LIN. FT. | REMARKS |
|---|---|---|---

COMPUTED BY: KND DATE: 07/02/25
CHECKED BY: MJW DATE: 07/02/25

(9-17-24)

STATE OF NORTH CAROLINA
DIVISION OF HIGHWAYS

PROJECT REFERENCE NO.	SHEET NO.
U-4700CB	3G-1

SUMMARY OF SUBSURFACE DRAINAGE

LINE	Station	Station	Location LT/RT/CL	Drain Type* UD/BD/SD	LF
-L-	596+25	597+75	LT / RT	SD	300
CONTINGENCY				SD	300
				TOTAL LF:	600

*UD = Underdrain

*BD = Blind Drain

*SD = Subsurface Drain

SUMMARY OF AGGREGATE SUBGRADE/STABILIZATION

LINE	Station	Station	Aggregate Type* ASU(1/2)/ AST	Aggregate Thickness INCHES [8" for ASU(2)]	Shallow Undercut CY	Class IV Subgrade Stabilization TONS	Geotextile for Subgrade Stabilization SY	Stabilizer Aggregate TONS	Class IV Aggregate Stabilization TONS
CONTINGENCY			ASU1	12	150	300	450		
			TOTAL CY/TONS/SY:		150	300**	450**	0	0

*ASU(1/2) = Aggregate Subgrade (Type 1 or 2)

*AST = Aggregate Stabilization

**Total tons of "Class IV Subgrade Stabilization" and total square yards of "Geotextile for Subgrade Stabilization" are only the estimated quantities for ASU(1/2)/AST and may only represent a portion of the subgrade stabilization and geotextile quantities shown in the Item Sheets of the Proposal.

5/14/2026 4:56:18 PM
*\Kpc-U4700CB_RDY_3G-1_SUM.dgn
User: kcarter

PROJECT REFERENCE NO.	SHEET NO.
U-4700CB	3P-1

STATE OF NORTH CAROLINA
DIVISION OF HIGHWAYS

PARCEL INDEX SHEET

PARCEL No.	SHEET No.	PROPERTY OWNER NAME
1, 1Z	4	BEN GRIFFIN REALTY & AUCTION, INC.
2, 2Z	4	HUDSON HOUSING PARTNERSHIP (LP POWDER CREEK APTS)
3	5	WALGREEN CO.
4	5	D&H REAL ESTATE, LLC
5	5	ECKERD CORPORATION
6	5	HUNTLEY & WATERS, LLC
7	5 & 6	ERNIE CLINE
8	6	JAMES SECREAST
9	5	HUDSON-HWY 321, LLC
10	5 & 6	CALDWELL COMMUNITY COLLEGE
11	6	STATE OF NORTH CAROLINA

4/5/2024 10:28:48 AM
U-4700CB_RDY_3P-1_SUM.dgn
User: Hamner

Docusign Envelope ID: 426BC4E7-9E31-8FEC-82B3-E00BDE3EE578

8/17/99

Johnson, Mirmiran, & Thompson Inc.
4700 Falls of Neuse Rd, Suite 100,
Raleigh, NC, 27609
License No: C-3097

PROJECT REFERENCE NO.	SHEET NO.
U-4700CB	4
R/W SHEET NO.	

ROADWAY DESIGN ENGINEER
6/2/2026 12:49:04 PM EDT
NORTH CAROLINA PROFESSIONAL SEAL 26960 ENGINEER REECE M. SCHULER
Reece Schuler
DocuSigned by:
C8D9A7A7B2B4C...

HYDRAULICS ENGINEER
6/2/2026 1:06:22 PM EDT
NORTH CAROLINA PROFESSIONAL SEAL 035700 ENGINEER KEVIN P. WIGGINS
Kevin Wiggins
DocuSigned by:
E8D8B5E4B8D444...

DOCUMENT NOT CONSIDERED FINAL UNLESS ALL SIGNATURES COMPLETED

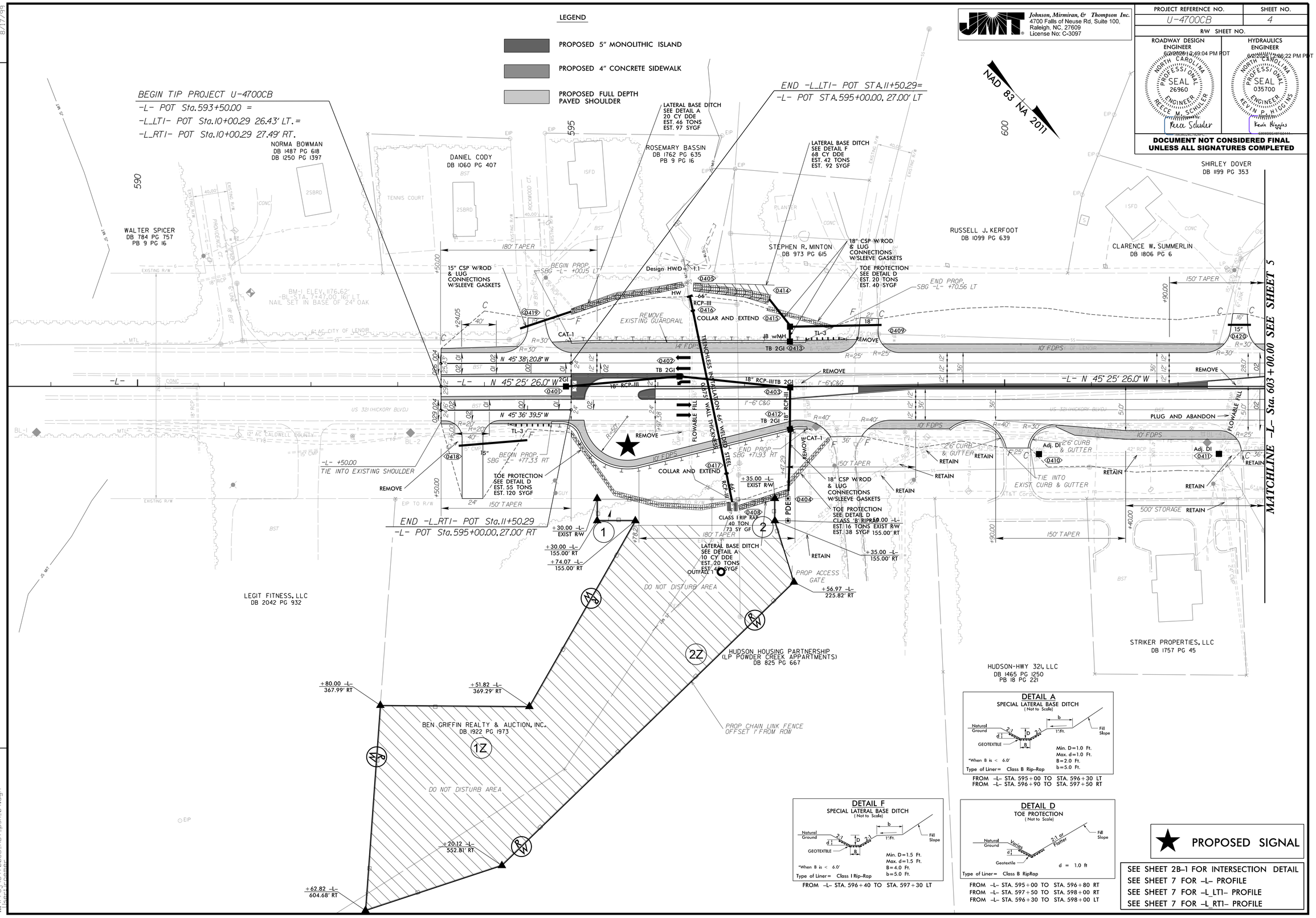

DETAIL A
SPECIAL LATERAL BASE DITCH
(Not to Scale)

Natural Ground, 2:1, d, D, 2:1, b, 1':Ft., Fill Slope, GEOTEXTILE, B

Min. D=1.0 Ft.
Max. d=1.0 Ft.
B=2.0 Ft.
b=5.0 Ft.

*When B is < 6.0'
Type of Liner= Class B Rip-Rap

FROM -L- STA. 595+00 TO STA. 596+30 LT
FROM -L- STA. 596+90 TO STA. 597+50 RT

DETAIL F
SPECIAL LATERAL BASE DITCH
(Not to Scale)

Natural Ground, 2:1, d, D, 2:1, b, 1':Ft., Fill Slope, GEOTEXTILE, B

Min. D=1.5 Ft.
Max. d=1.5 Ft.
B=4.0 Ft.
b=5.0 Ft.

*When B is < 6.0'
Type of Liner= Class I Rip-Rap

FROM -L- STA. 596+40 TO STA. 597+30 LT

DETAIL D
TOE PROTECTION
(Not to Scale)

Natural Ground, Varies, 2:1 or Flatter, Fill Slope, d, Geotextile

d = 1.0 ft

Type of Liner= Class B RipRap

FROM -L- STA. 595+00 TO STA. 596+80 RT
FROM -L- STA. 597+50 TO STA. 598+00 RT
FROM -L- STA. 596+30 TO STA. 598+00 LT

SEE SHEET 2B-1 FOR INTERSECTION DETAIL
SEE SHEET 7 FOR -L- PROFILE
SEE SHEET 7 FOR -L_LT1- PROFILE
SEE SHEET 7 FOR -L_RT1- PROFILE

5/29/2026 12:00:37 PM
:\Proj\U4700CB_RDY_psh_04.dgn
User: kpenner

Docusign Envelope ID: 426BC4E7-9E31-8FEC-82B3-E00BDE3EE578

8/17/99

JMT Johnson, Mirmiran, & Thompson Inc.
4700 Falls of Neuse Rd, Suite 100,
Raleigh, NC, 27609
License No: C-3097

PROJECT REFERENCE NO.	SHEET NO.
U-4700CB	5
R/W SHEET NO.	

ROADWAY DESIGN ENGINEER
6/2/2026 | 2:49:04 PM EDT
NORTH CAROLINA PROFESSIONAL SEAL 26960 ENGINEER REECE MUSSLER SCHULER
Reece Schuler

HYDRAULICS ENGINEER
6/2/2026 | 2:06:22 PM EDT
NORTH CAROLINA PROFESSIONAL SEAL 035700 ENGINEER KEVIN BRIGGS
Kevin Briggs

DOCUMENT NOT CONSIDERED FINAL UNLESS ALL SIGNATURES COMPLETED

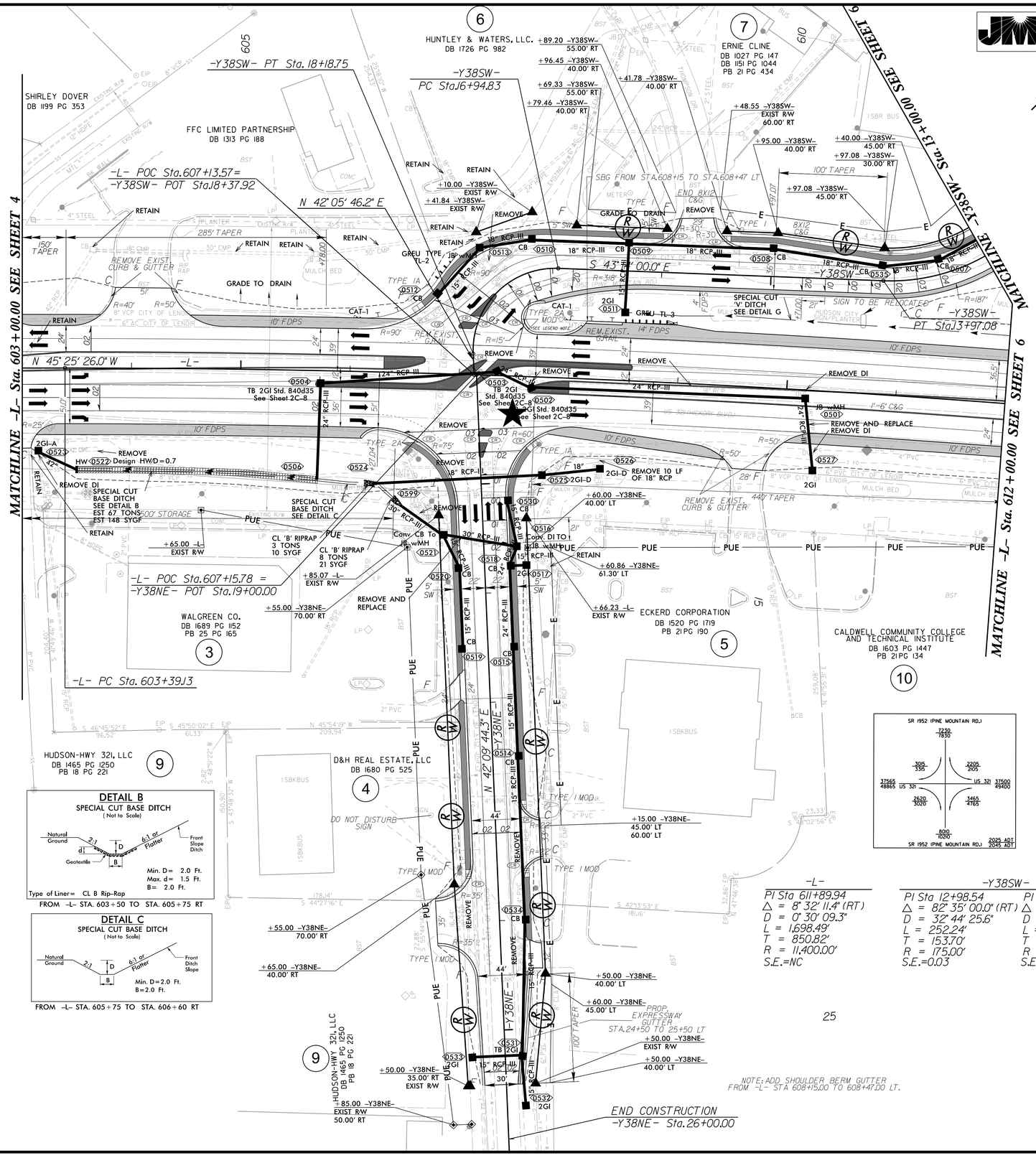

LEGEND

- PROPOSED 5" MONOLITHIC ISLAND
- PROPOSED 4" CONCRETE SIDEWALK
- PROPOSED FULL DEPTH PAVED SHOULDER

*GRADE AREA 2% TOWARDS CURB

DETAIL G
SPECIAL CUT DITCH
(Not to Scale)

Natural Ground, 3:1 or Flatter, D, 3:1 or Flatter, Front Ditch Slope

Min. D = 1.5 Ft.

FROM -L- STA. 608+50 TO STA. 612+00 LT

DETAIL B
SPECIAL CUT BASE DITCH
(Not to Scale)

Natural Ground, 2:1, D, 6:1 or Flatter, Front Slope Ditch, Geotextile, B

Min. D = 2.0 Ft.
Max. d = 1.5 Ft.
B = 2.0 Ft.

Type of Liner = CL B Rip-Rap

FROM -L- STA. 603+50 TO STA. 605+75 RT

DETAIL C
SPECIAL CUT BASE DITCH
(Not to Scale)

Natural Ground, 2:1, D, 6:1 or Flatter, Front Ditch Slope

Min. D = 2.0 Ft.
B = 2.0 Ft.

FROM -L- STA. 605+75 TO STA. 606+60 RT

-L-	-Y38SW-	
PI Sta 611+89.94	PI Sta 12+98.54	PI Sta 17+76.20
Δ = 8° 32' 11.4" (RT)	Δ = 82° 35' 00.0" (RT)	Δ = 94° 40' 13.8" (LT)
D = 0° 30' 09.3"	D = 32° 44' 25.6"	D = 76° 23' 39.7"
L = 1,698.49'	L = 252.24'	L = 123.92'
T = 850.82'	T = 153.70'	T = 81.38'
R = 11,400.00'	R = 175.00'	R = 75.00'
S.E. = NC	S.E. = 0.03	S.E. = 0.04

★ PROPOSED SIGNAL

FOR PROFILE OF LINE -L- SEE SHEET 7
SEE SHEET 2B-1 FOR INTERSECTION DETAIL
SEE SHEET 7 FOR -L- PROFILE
SEE SHEET 8 FOR -Y38SW- PROFILE
SEE SHEET 8 FOR -Y38NE- PROFILE

5/29/2026 11:58:00 AM
\\Pro\U4700CB_RBY_psh05.dgn
User: keeper

Docusign Envelope ID: 426BC4E7-9E31-8FEC-82B3-E00BDE3EE578

8/17/99

PROJECT REFERENCE NO.	SHEET NO.
U-4700CB	6
R/W SHEET NO.	

Johnson, Mirmiran, & Thompson Inc.
4700 Falls of Neuse Rd, Suite 100,
Raleigh, NC, 27609
License No: C-3097

ROADWAY DESIGN ENGINEER
6/20/2026 12:49:04 PM PDT
NORTH CAROLINA PROFESSIONAL SEAL 26960 ENGINEER REECE SCHULER
Reece Schuler
10E5A05AC7E24EC...

HYDRAULICS ENGINEER
6/20/2026 1:06:22 PM PDT
NORTH CAROLINA PROFESSIONAL SEAL 035700 ENGINEER KEVIN M. HIGGINS
Kevin Higgins
E90DDBC4BC2444...

DOCUMENT NOT CONSIDERED FINAL UNLESS ALL SIGNATURES COMPLETED

-L-
PI Sta 611+89.94
Δ = 8° 32' 11.4" (RT)
D = 0° 30' 09.3"
L = 1,698.49'
T = 850.82'
R = 11,400.00'
S.E. = NC

-Y38SW-
PI Sta 12+98.54
Δ = 82° 35' 00.0" (RT)
D = 32° 44' 25.6"
L = 252.24'
T = 153.70'
R = 175.00'
S.E. = 0.04

-RPA-
PI Sta 7+70.90
Δ = 20° 25' 52.3" (RT)
D = 4° 46' 28.7"
L = 427.91'
T = 216.25'
R = 1,200.00'

-WALLI-
PI Sta 2+97.22
Δ = 21° 16' 03.4" (RT)
D = 92° 15' 49.4"
L = 23.05'
T = 11.66'
R = 62.10'

NAD 83 NA 2011

BEGIN CONSTRUCTION
-Y38SW- PT Sta.10+00.00
BEGIN GRADING AND PAVING
-Y38SW- POT STA.10+30.00

BEGIN -WALLI- STA.0+00.00
-L- Sta.617+84.99
67.28' LT

BEGIN -L_LT2- Sta.10+00.00 =
-L- STA.621+41.31 27.00' LT

-RPA- PC Sta. 5+54.65

-L- POC Sta. 616+61.08 39.0' LT.=
-RPA- POT Sta. 5+00.00

-Y38SW- PC Sta.11+44.85

-Y38SW- POC Sta. 12+62.76=
-RPA- PT Sta. 9+82.56

END -WALLI- Sta. 3+61.28
-L- POT Sta.621+39.98
71.99' LT

END TIP PROJECT U-4700CB
-L- POT Sta.622+47.07
-L_LT2- POT Sta.11+05.76 26.39' LT.
-L_RT2- POT Sta.11+05.76 25.46' RT.

END CONSTRUCTION U-4700CB
-L- Sta.POT 623+28.96

-L- PT Sta. 620+37.61

MATCHLINE -Y38SW- Sta. 13+00.00 SEE SHEET 5

MATCHLINE -L- Sta. 612+00.00 SEE SHEET 5

8 JAMES SECREAST DB 310 PG 385

7 ERNIE CLINE DB 1027 PG 147 DB 1151 PG 1044 PB 21 PG 434

11 STATE OF NORTH CAROLINA DB 421 PG 13

CALDWELL COUNTY DB 1567 PG 1123

CALDWELL COUNTY DB 1567 PG 1123

CALDWELL COMMUNITY COLLEGE AND TECHNICAL INSTITUTE DB 1603 PG 1447 PB

SAMUEL SWANSON DB 1186 PG 492 DB 1135 PG 1457

SKILL CREATIONS INC. DB 1435 PG 698

REAVESTON ENTERPRISES, LLC. DB 1761 PG 1539

WILLIAM SMITH DB 1272 PG 934

JENNIFER CHURCH DB 1884 PG 842

N 54° 11' 00.0" E

S 34° 44' 00.0" E

N 36° 33' 11.2" W

N 36° 53' 14.6" W

N 37° 40' 16.1" W

Design HW/D = 1.5

Flowable Fill

CAT-1

GREU TL-3

CL 'B' RIPRAP 2 TONS 7 SYGF

REMOVE EXIST. GUARDRAIL

BEGIN SHOULDER BERM GUTTER -RP A- STA.7+00.00

BEGIN EXPRESSWAY GUTTER -L- STA.617+22.97

END SHOULDER BERM GUTTER -L- STA.617+12.97

SHLD BERM GUTTER TO EXPRESSWAY GUTTER TRANSITION SEE SHEET 2B-9

END EXPRESSWAY GUTTER -L- Sta.621+41.31

SPECIAL CUT 'V' DITCH SEE DETAIL G

SPECIAL CUT 'V' DITCH SEE DETAIL H

REMOVE

RETAIN

REMOVE & REPLACE 2GI

RETAIN CB

DO NOT DISTURB SIGN

15" RCP-III

EXP.GUTTER

10' FDPS

150' TAPER

175' TAPER

105' TAPER

180' TAPER

DETAIL G
SPECIAL CUT DITCH
(Not to Scale)
Natural Ground
3:1 or Flatter
D
3:1 or Flatter
Front Ditch Slope
Min. D = 1.5 Ft.
FROM -L- STA. 612+00 TO STA. 613+50 LT

DETAIL H
SPECIAL CUT DITCH
(Not to Scale)
Natural Ground
2:1
D
3:1 or Flatter
Front Ditch Slope
Min. D = 1.5 Ft.
FROM -L- STA. 620+50 TO STA. 621+50 RT

DETAIL E
CONCRETE DITCH BEHIND RETAINING WALL
(Not to Scale)
RETAINING WALL
BOND BREAKER
VARIES
NATURAL GROUND
D
B
2:1
4"
D = 1.0'
B = 2.0'
FROM -L- STA. 617+84.99 TO -L- STA. 621+39.98 LT

DETAIL SHOWING PROP. C&G FLARE -Y38SW- RT.

LEGEND

PROPOSED 5" MONOLITHIC ISLAND

PROPOSED 4" CONCRETE SIDEWALK

PROPOSED FULL DEPTH PAVED SHOULDER

★ PROPOSED SIGNAL

SEE SHEET 2B-2 FOR INTERSECTION DETAIL
SEE SHEET 7 FOR -L- PROFILE
SEE SHEET 7 FOR -L_LT2- PROFILE
SEE SHEET 7 FOR -L_RT2- PROFILE
SEE SHEET 8 FOR -Y38SW- PROFILE
SEE SHEET 8 FOR -RPA- PROFILE

6/1/2026 4:50:54 PM
...\Proj\U4700CB_RDy_psh06.dgn
User:reeser

Docusign Envelope ID: 426BC4E7-9E31-8FEC-82B3-E00BDE3EE578

PROJECT REFERENCE NO.	SHEET NO.
U-4700CB	7

ROADWAY DESIGN ENGINEER
6/20/2026 12:49:04 PM PDT
NORTH CAROLINA PROFESSIONAL SEAL 26960 ENGINEER REECE SCHULER
DocuSigned by: Reece Schuler

HYDRAULICS ENGINEER
6/20/2026 12:06:22 PM PDT
NORTH CAROLINA PROFESSIONAL SEAL 035700 ENGINEER KEVIN P. HIGGINS
DocuSigned by: Kevin Higgins

DOCUMENT NOT CONSIDERED FINAL UNLESS ALL SIGNATURES COMPLETED

Johnson, Mirmiran, & Thompson Inc.
4700 Falls of Neuse Rd, Suite 100,
Raleigh, NC, 27609
License No: C-3097

L_LT1

SEE SHEETS 4 FOR PLAN VIEW

LEFT DITCH

BEGIN GRADE -L_LT1- POT Sta.10+00.00
-L- POT Sta 593+50.00 27.00' LT
EL= 1,171.50'
END GRADE -L_LT1- POT Sta.11+50.29
-L- POT Sta 595+00.00 27.00' LT
EL= 1,169.66'
PROPOSED GRADE
(-)1.2268%
EXISTING GROUND

L_RT1

SEE SHEETS 4 FOR PLAN VIEW

RIGHT DITCH

BEGIN GRADE -L_RT1- POT Sta.10+00.00
-L- Sta 593+50.00 27.00' RT
EL= 1,171.28'
END GRADE -L_RT1- POT Sta.11+50.29
-L- POT Sta 595+00.00 27.00' RT
EL= 1,169.66'
PROPOSED GRADE
(-)1.0821%
EXISTING GROUND

-L-

BEGIN GRADE -L- POT STA.595+00.00 =
END GRADE -L_LT1_ POT STA.11+50.00 27.00' LT =
END GRADE -L_RT1_ POT STA.11+50.00 27.00' RT
ELEV. = 1,170.20'

PI = 598+60.00
EL = 1,164.38'
VC = 660'
K = 138

PROPOSED GRADE
(-)1.6177%
(+)3.1596%
(+)3.13%
EXISTING GROUND

BEGIN DITCH LT.
STA. 595+00
ELEV. = 1155.86'

(-)16.70%
(-)9.30%
(-)7.13%
(+)5.46%
(+)11.46%
(+)4.66%

DITCH LT.
STA. 595+50
ELEV. = 1147.51'

DITCH LT.
STA. 596+00
ELEV. = 1142.88'

END DITCH LT.
STA. 596+30.00
ELEV. = 1140.74'

BEGIN DITCH LT.
STA. 596+40
ELEV. = 1140.74'

DITCH LT.
STA. 596+50
ELEV. = 1141.19'

66" WSP

END DITCH LT.
STA. 597+30
ELEV. = 1147.36'

DITCH LT.
STA. 597+00
ELEV. = 1143.92'

END DITCH RT
STA. 597+50
ELEV. = 1135.80'

DITCH RT
STA. 597+00
ELEV. = 1133.47'

BEGIN DITCH RT
STA. 596+90
ELEV. = 1133.38'

BEGIN UNDERCUT
-L- STA. 596+25

END UNDERCUT
-L- STA. 597+75

PIPE HYDRAULIC DATA

66" WSP	-L- STA.596+58	
DRAINAGE AREA	= 61.5	AC.
DESIGN FREQUENCY	= 50	YRS
DESIGN DISCHARGE	= 118	CFS
DESIGN HW ELEVATION	= 1144.9	FT
100-YR DISCHARGE	= 158	CFS
100-YR HW ELEVATION	= 1145.3	FT
OVERTOPPING FREQUENCY	= 500+	YRS
OVERTOPPING DISCHARGE	= 438.1	CFS
OVERTOPPING ELEVATION	= 1168.4	FT

BEGIN DITCH RT.
STA. 603+00
ELEV. = 1174.38'

(-)7.13%

MATCHLINE -L- Sta. 603+50.00 THIS SHEET

LEFT DITCH
RIGHT DITCH

SEE SHEETS 4 AND 5 FOR PLAN VIEW

-L-

MATCHLINE -L- Sta. 603+50.00

PROPOSED GRADE
(+)3.1596%
(+)3.13%
EXISTING GROUND

BEGIN DITCH LT.
STA. 608+50
ELEV. = 1190.73'

(+)3.68%

DITCH LT.
STA. 609+50
ELEV. = 1192.57'

(+)2.31%

DITCH LT.
STA. 610+50
ELEV. = 1194.88'

(+)1.17%

DITCH LT.
STA. 611+50
ELEV. = 1196.05'

(+)0.6

END DITCH RT.
STA. 606+60
ELEV. = 1182.05'

LEFT DITCH

SEE SHEETS 5 AND 6 FOR PLAN VIEW

MATCHLINE -L- Sta. 612+50.00

L_LT2

SEE SHEET 6 FOR PLAN VIEW

BEGIN GRADE -L_LT2- POT Sta.10+00.00=
-L- POT Sta 621+41.30 27.00' LT
EL = 1,189.10'
PROPOSED GRADE
(-)2.8247%
EXISTING GROUND
END GRADE -L_LT2- POT Sta.11+05.76
-L- POT Sta 622+47.07 27.00' LT
EL = 1,186.11'

-L-

MATCHLINE -L- Sta. 612+50.00

PI = 613+90.00
EL = 1,212.72'
VC = 1,500'
K = 241

(+)3.1596%
(-)13.0714%
PROPOSED GRADE

-L- STA. 612+72.95
OFFSET 724.48' LT.
BM-2, ELEV. 1240.93'
-BL STA.- 5+24.00 81.00' RT
NAIL SET IN BASE OF 18" OAK

-L- STA. 617+93.48
OFFSET 104.69' RT.
BM-3, ELEV. 1196.57'
-BL STA.- 34+03.00 48.00' RT
TOP OF MTL SIGN BASE

END GRADE -L- POT STA.621+41.30 =
BEGIN GRADE -L_LT2- POT STA 10+00.00 27.00' LT =
BEGIN GRADE -L_RT2- POT STA 10+00.00 27.00' RT
ELEV. = 1,189.64'

END DITCH LT.
STA. 613+50
ELEV. = 1197.24'

PIPE HYDRAULIC DATA

Ex.30" CMP	-L- STA.616+35	
DRAINAGE AREA	= 10.6	AC.
DESIGN FREQUENCY	= 50	YRS
DESIGN DISCHARGE	= 31.5	CFS
DESIGN HW ELEVATION	= 1164.8	FT
100-YR DISCHARGE	= 34.2	CFS
100-YR HW ELEVATION	= 1165.2	FT
OVERTOPPING FREQUENCY	= 500+	YRS
OVERTOPPING DISCHARGE	= 89.8	CFS
OVERTOPPING ELEVATION	= 1198.5	FT

EXISTING GROUND
Ex. 30" CMP
Inv @ CL. 1159.27'

BEGIN DITCH RT.
STA. 620+50
ELEV. = 1188.79'
SEE SHEET 6 FOR PLAN VIEW

(+)2.50%
(+)3.40%

DITCH RT.
STA. 621+00
ELEV. = 1187.54'

END DITCH RT.
STA. 621+50
ELEV. = 1185.84'

L_RT2

SEE SHEET 6 FOR PLAN VIEW

BEGIN GRADE -L_RT2- POT Sta.10+00.00
-L- POT Sta 621+41.31 27.00' RT
EL = 1,189.10'
PROPOSED GRADE
(-)2.5830%
EXISTING GROUND
END GRADE -L_RT2- POT Sta.11+05.76
-L- POT Sta 622+47.07 27.00' RT
EL = 1,186.37'

5/28/99

5/19/2026 6:13:30 PM
U:\projects\4700cb_rdy_PFL7.dgn
11:sect_1_corner

Docusign Envelope ID: 426BC4E7-9E31-8FEC-82B3-E00BDE3EE578

PROJECT REFERENCE NO.	SHEET NO.
U-4700CB	8

ROADWAY DESIGN ENGINEER
6/2/2026 1:49:04 PM PDT
NORTH CAROLINA PROFESSIONAL SEAL 26960 ENGINEER REECE N. SCHULER
Reece Schuler

HYDRAULICS ENGINEER
6/2/2026 2:06:22 PM PDT
NORTH CAROLINA PROFESSIONAL SEAL 035700 ENGINEER KEVIN P. HIGGINS
Kevin Higgins

DOCUMENT NOT CONSIDERED FINAL UNLESS ALL SIGNATURES COMPLETED

Johnson, Mirmiran, & Thompson Inc.
4700 Falls of Neuse Rd, Suite 100,
Raleigh, NC, 27609
License No: C-3097

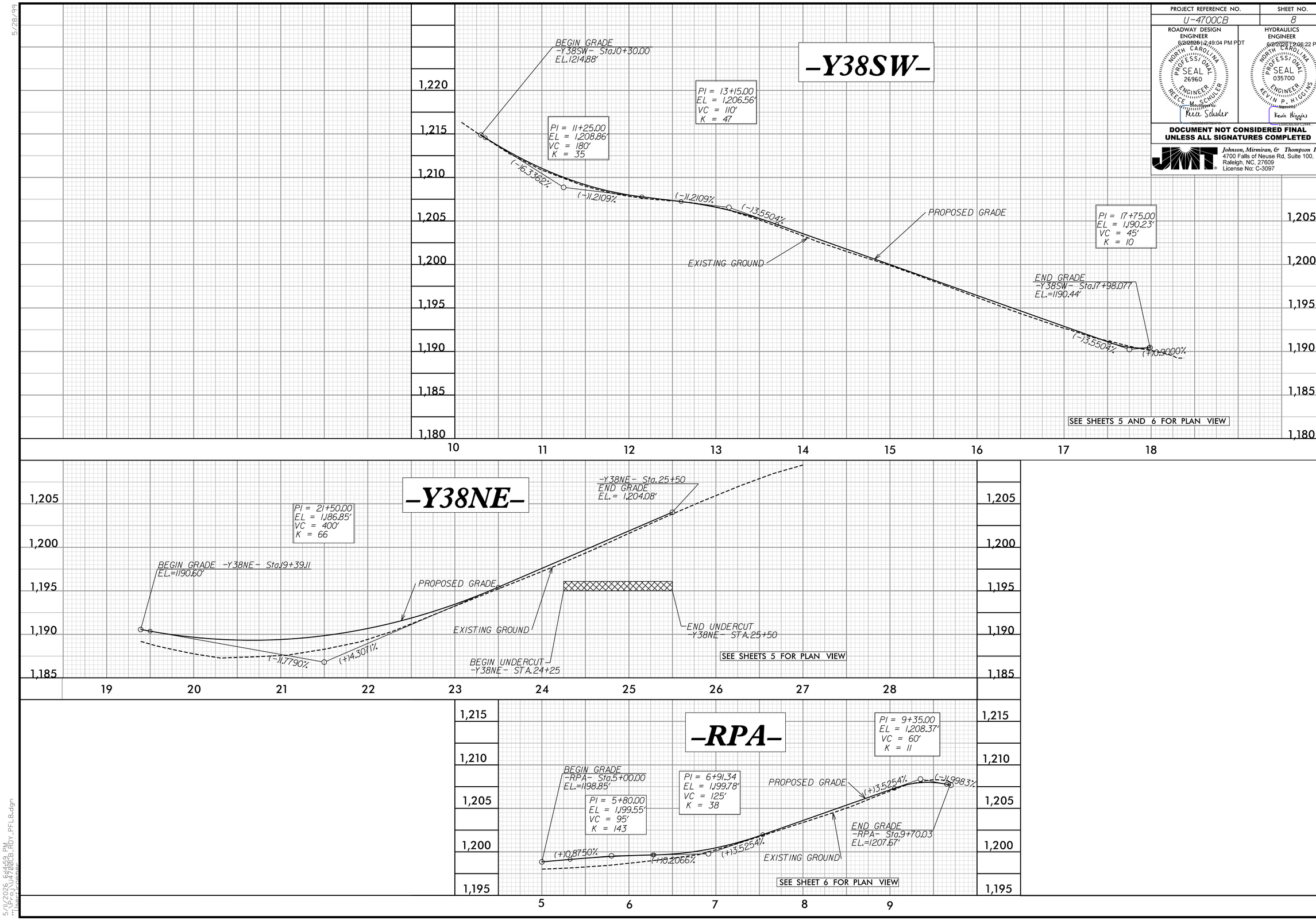

5/28/99

5/1/2026 6:41:58 PM
U:\6004_U4700CB_Rdy_PFL8.dgn
11:sect1c.dgnpr