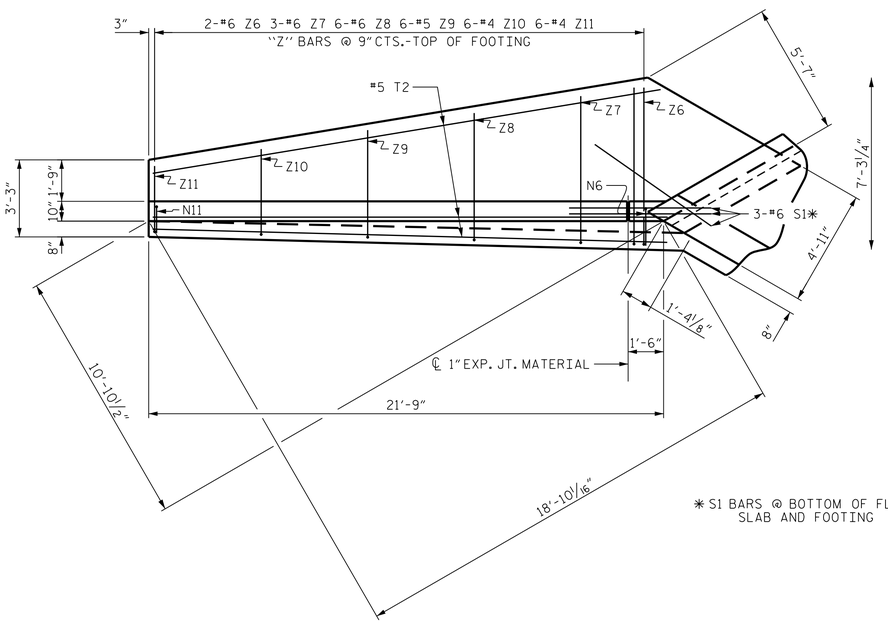

PLAN W1

(1 REQ'D)

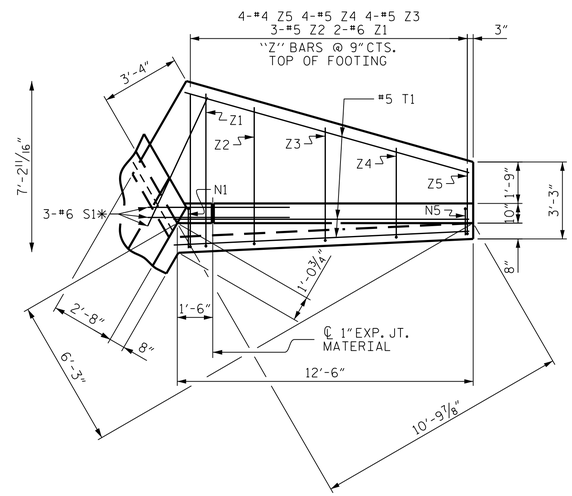

PLAN W2

(2 REQ'D)

* S1 BARS @ BOTTOM OF FLOOR SLAB AND FOOTING

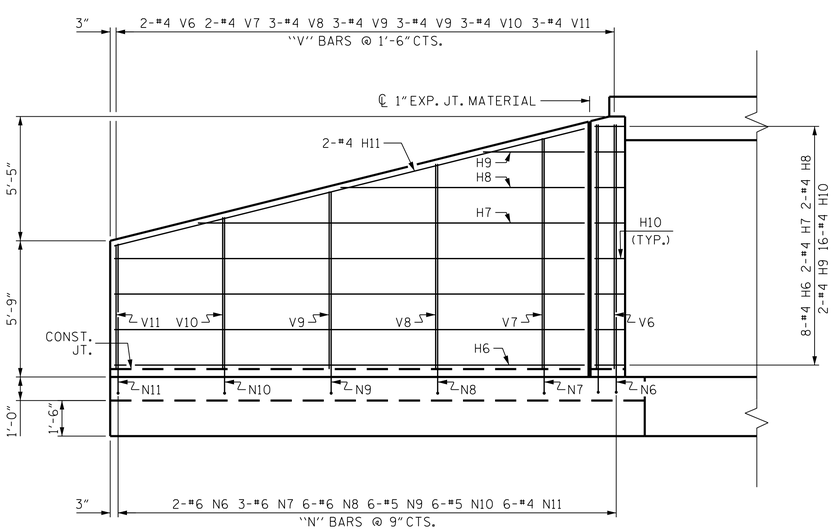

ELEVATION W1

(1 REQ'D)

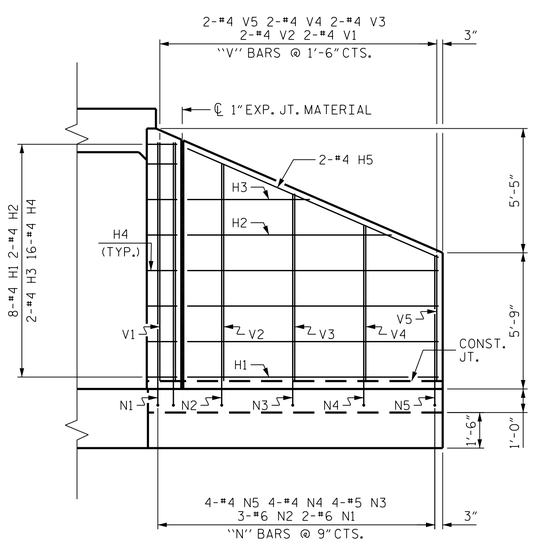

ELEVATION W2

(2 REQ'D)

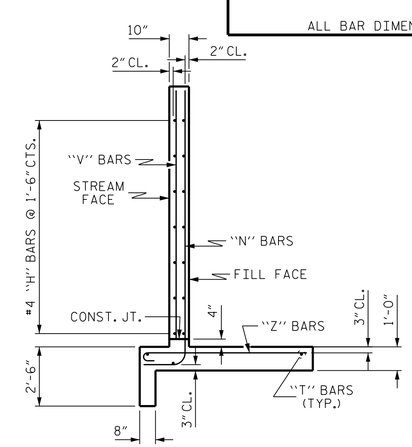

TYPICAL WING SECTION

BAR TYPES

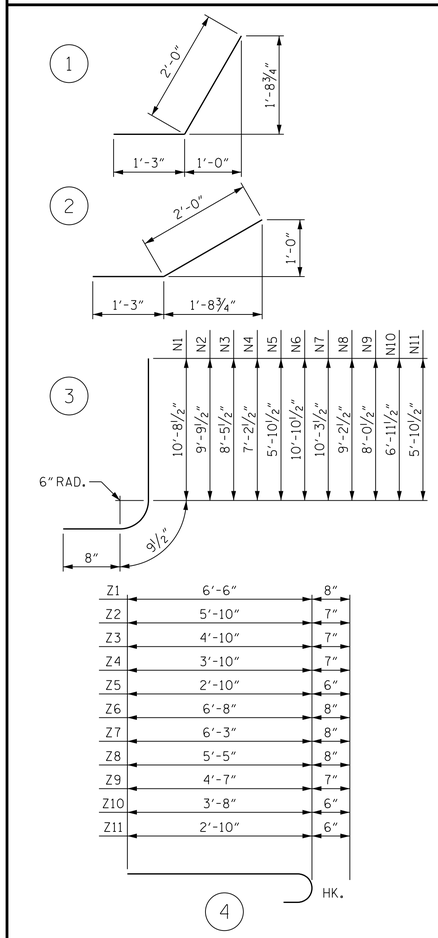

ALL BAR DIMENSIONS ARE OUT TO OUT.

BILL OF MATERIAL

BAR	NO.	SIZE	TYPE	LENGTH	WEIGHT
H1	16	#4	STR	10'-7"	113
H2	4	#4	STR	8'-7"	23
H3	4	#4	STR	5'-2"	14
H4	32	#4	1	3'-3"	69
H5	4	#4	STR	11'-7"	31
H6	8	#4	STR	19'-10"	106
H7	2	#4	STR	16'-4"	22
H8	2	#4	STR	10'-3"	14
H9	2	#4	STR	4'-3"	6
H10	16	#4	2	3'-3"	35
H11	2	#4	STR	20'-5"	27
N1	4	#6	3	12'-2"	73
N2	6	#6	3	11'-3"	101
N3	8	#5	3	9'-11"	83
N4	8	#4	3	8'-8"	46
N5	8	#4	3	7'-4"	39
N6	2	#6	3	12'-4"	37
N7	3	#6	3	11'-9"	53
N8	6	#6	3	10'-8"	96
N9	6	#5	3	9'-6"	59
N10	6	#5	3	8'-5"	53
N11	6	#4	3	7'-4"	29
S1	9	#6	STR	6'-0"	81
T1	6	#5	STR	12'-6"	78
T2	3	#5	STR	21'-9"	68
V1	4	#4	STR	10'-1"	27
V2	4	#4	STR	9'-2"	24
V3	4	#4	STR	7'-11"	21
V4	4	#4	STR	6'-7"	18
V5	4	#4	STR	5'-4"	14
V6	2	#4	STR	10'-4"	14
V7	2	#4	STR	9'-9"	13
V8	3	#4	STR	8'-8"	17
V9	3	#4	STR	7'-6"	15
V10	3	#4	STR	6'-5"	13
V11	3	#4	STR	5'-3"	11
Z1	4	#6	4	7'-2"	43
Z2	6	#5	4	6'-5"	40
Z3	8	#5	4	5'-5"	45
Z4	8	#5	4	4'-5"	37
Z5	8	#4	4	3'-4"	18
Z6	2	#6	4	7'-4"	22
Z7	3	#6	4	6'-11"	31
Z8	6	#6	4	6'-1"	55
Z9	6	#5	4	5'-2"	32
Z10	6	#4	4	4'-2"	17
Z11	6	#4	4	3'-4"	13

REINFORCING STEEL FOR 3 WINGS	1,896	LBS
CLASS A CONCRETE		
3 WINGS	25.7	CY
2 HEADWALLS	2.0	CY
2 END CURTAIN WALLS	1.3	CY
TOTAL	29.0	CY

PROJECT NO. U-5810
WATAUGA COUNTY
STATION: 52+14.00 -L-

STATE OF NORTH CAROLINA
DEPARTMENT OF TRANSPORTATION
RALEIGH

WINGS 1& 2 FOR CONCRETE BOX CULVERT

H = 10'-0" SLOPE = 2:1

RK&K
P: (919) 878-9560
8601 Six Forks Road, Forum 1 Suite 700
Raleigh, North Carolina 27615 | NC License No. F-0112
Engineers | Construction Managers | Planners | Scientists
www.rkk.com
Responsive People | Creative Solutions

NORTH CAROLINA PROFESSIONAL SEAL 48850 ENGINEER ONDINE J. PAITEL
DocuSigned by: Ondine J. Paitel
4/16/2026

DOCUMENT NOT CONSIDERED FINAL UNLESS ALL SIGNATURES COMPLETED

REVISIONS							
NO.	BY:	DATE:	NO.	BY:	DATE:	SHEET NO.	C-11
1			3			TOTAL SHEETS	13
2			4				

DRAWN BY : T. K. BOYD DATE : MAR. 2026
CHECKED BY : R. V. KEITH DATE : MAR. 2026
DESIGN ENGINEER OF RECORD : O. J. PAITEL DATE : MAR. 2026

bgonfa
4/14/2026 R:\Structures\DGN\Final_Culvert\U-5810_CU_11.dgn