PROJECT REFERENCE NO.	SHEET NO.
U-5810	2C-7

USE THIS STRUCTURE FOR PIPE SIZES 15″ THROUGH 36″. THE PIPE MAY BE CSP OR RCP.

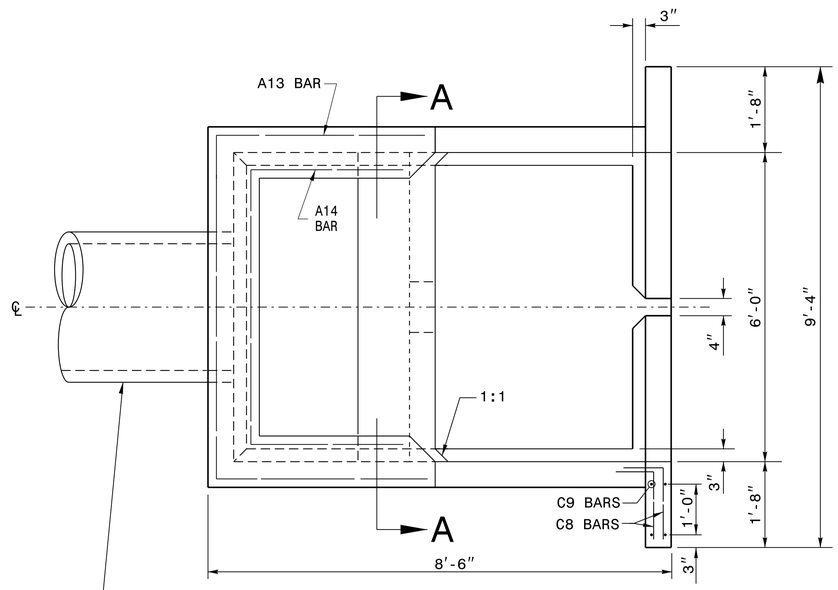

PLAN

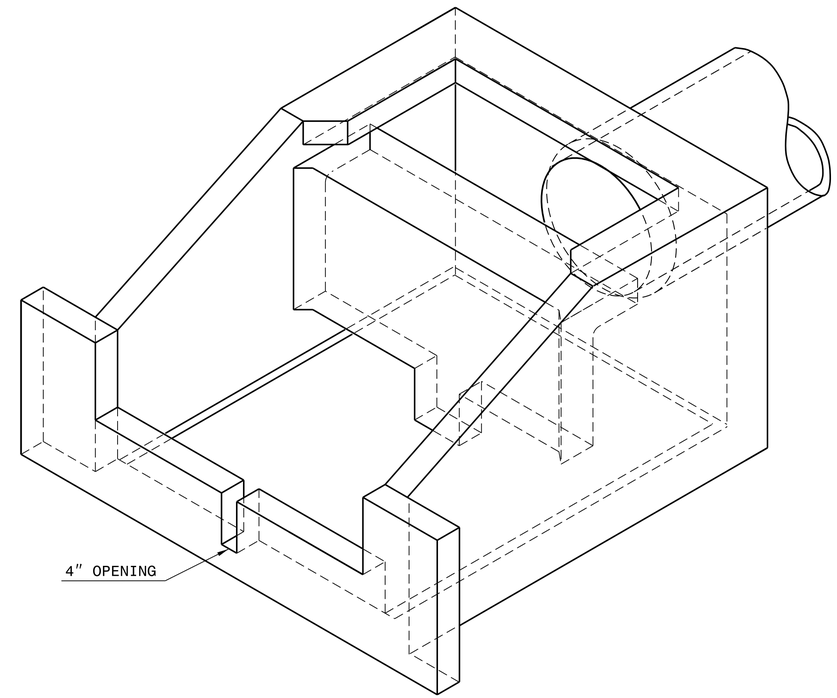

BILL OF MATERIAL

BAR	NO.	SIZE	TYPE	LENGTH	WEIGHT
A1	5	5	1	16′-2″	84.3
A2	1	5	1	16′-0″	16.7
A3	1	5	1	15′-4″	16.0
A4	1	5	1	14′-6″	15.1
A5	1	5	1	14′-0″	14.6
A6	1	5	1	11′-10″	12.3
A7	5	5	1	15′-8″	81.7
A8	1	5	1	15′-4″	16.0
A9	1	4	1	15′-9″	10.5
A10	1	4	1	13′-4″	8.9
A11	1	4	1	12′-7″	8.4
A12	1	4	1	11′-7″	7.7
A13	1	4	1	13′-5″	8.9
A14	1	4	1	11′-7″	7.7
B1	4	4	1	13′-4″	35.6
B2	4	4	1	9′-11″	26.5
B3	3	4	1	13′-4″	26.7
B4	3	4	1	9′-11″	19.9
B5	9	4	2	2′-6″	15.0
B6	9	4	2	2′-6″	15.0
B7	6	4	2	4′-0″	16.0
C1	4	4	STR	6′-8″	17.8
C2	8	8	1	8′-9″	186.9
C3	2	8	STR	6′-8″	35.6
C4	16	4	STR	8′-2″	87.3
C5	4	4	STR	4′-11″	13.1
C6	4	4	STR	6′-7″	17.6
C7	4	4	STR	2′-8″	7.1
C8	8	4	2	2′-4″	12.5
C9	8	4	STR	2′-8″	14.3
TOTAL REINF. STEEL (LBS.)					
CONCRETE (CU.YDS.)					3.44

* ALL SPLICES SHALL BE 1′-6″ MIN.

* ALL REINFORCING STEEL SHALL BE 2″ CL. OF ANY FACE UNLESS SHOWN OTHERWISE.

SEE PLANS FOR PIPE SIZE

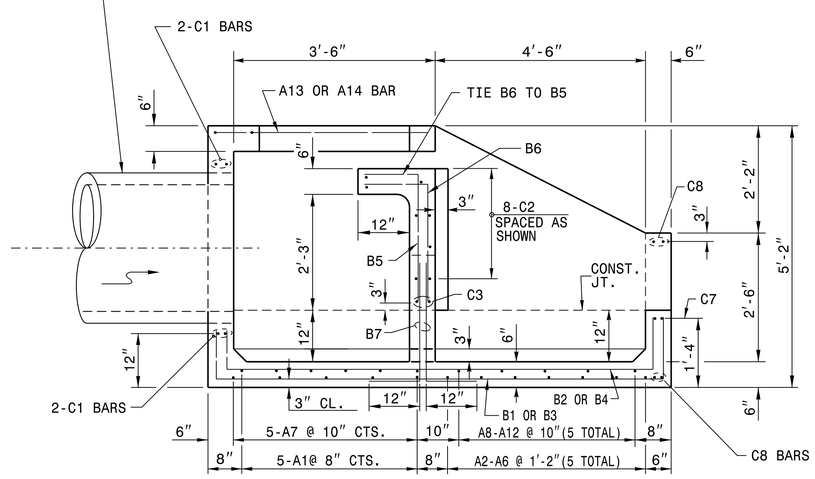

SECTION ON ℄

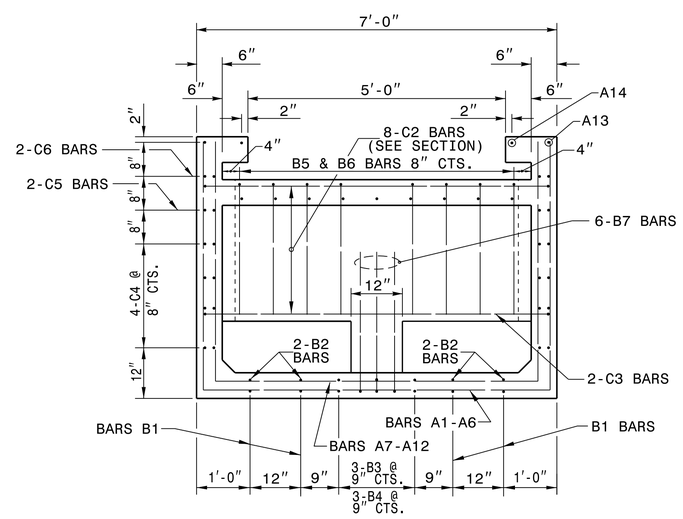

* SHIFT B3 & B4 BARS AS NECESSARY TO CLEAR 4″ OPENING

SECTION A-A

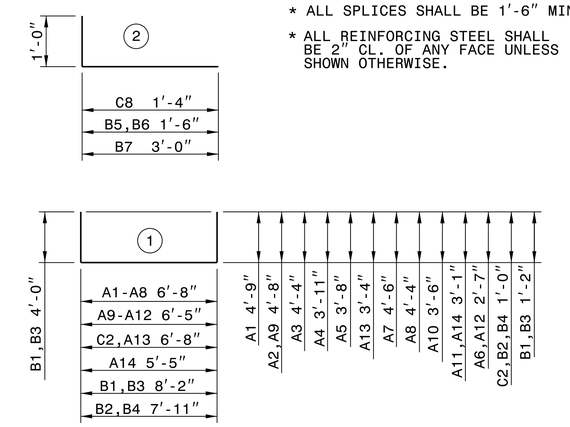

NORTH CAROLINA PROFESSIONAL SEAL 33144 ENGINEER NICOLE M. HUCKLE

1/2026

Signed by: Nicole M. Huckle
5884323D34164C5...

DOCUMENT NOT CONSIDERED FINAL UNLESS ALL SIGNATURES COMPLETED

CONTRACT STANDARDS AND DEVELOPMENT UNIT
Office 919-707-6950 FAX 919-250-4119

ENERGY DISSIPATOR

ORIGINAL BY:	T.S.S.	DATE:	Oct.1997
MODIFIED BY:	T.S.S.	DATE:	JULY 20, 2011
CHECKED BY:		DATE:	
FILE SPEC.:	s:details/stand/impacbasin2english.dgn		

07-MAY-2019 10:52
S:\Contracts\Special Details\jhowerton\Energy Dissipator.dgn
jhowerton AT CSD-292595

6/10/09