Docusign Envelope ID: 05876772-1DAF-4309-B21B-9789C5DB6FF4

PROJECT REFERENCE NO.	SHEET NO.
HL-0065	Sig. 11.1

18 CHANNEL CONFLICT MONITOR PROGRAMMING DETAIL

(remove jumpers and set switches as shown)

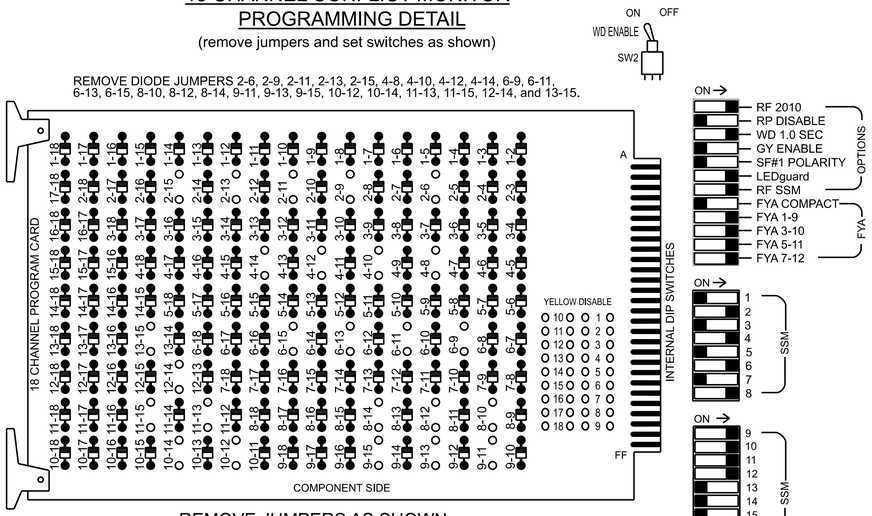

REMOVE JUMPERS AS SHOWN

NOTES:

1. Card is provided with all diode jumpers in place. Removal of any jumper allows its channels to run concurrently.
2. Ensure jumpers SEL2-SEL5 and SEL9 are present on the monitor board.

NOTES

1. To prevent "flash-conflict" problems, insert red flash program blocks for all unused vehicle load switches in the output file. The installer shall verify that signal heads flash in accordance with the signal plan.
2. Program phases 4 and 8 for Dual Entry.
3. Program phases 4 and 8 for Simultaneous Start.
4. Program controller to start up in phase 2 Green No Walk and 6 Green No Walk.
5. If this signal will be managed by an ATMS software, enable controller and detector logging for all detectors used at this location.

EQUIPMENT INFORMATION

Controller.....2070LX
Cabinet.....332 w/ Aux
Software.....Q-Free MAXTIME
Cabinet Mount.....Base
Output File Positions.....18 With Aux. Output File
Load Switches Used.....S2, S3, S5, S6, S8, S9, S11, AUX S1, AUX S2, AUX S4, AUX S5
Phases Used.....2, 2PED, 4, 4PED, 6, 6PED, 8
Overlap "1".....*
Overlap "2".....*
Overlap "3".....*
Overlap "4".....*

*See overlap programming detail on sheet 2

SIGNAL HEAD HOOK-UP CHART

LOAD SWITCH NO.	S1	S2	S3	S4	S5	S6	S7	S8	S9	S10	S11	S12	AUX S1	AUX S2	AUX S3	AUX S4	AUX S5	AUX S6
CMU CHANNEL NO.	1	2	13	3	4	14	5	6	15	7	8	16	9	10	17	11	12	18
PHASE	1	2	2 PED	3	4	4 PED	5	6	6 PED	7	8	8 PED	OL1	OL2	SPARE	OL3	OL4	SPARE
SIGNAL HEAD NO.	NU	22;23	P21, P22	NU	42;43	P41, P42	NU	62;63	P61, P62	NU	82;83	NU	61 ★	81 ★	NU	21 ★	41 ★	NU
RED		128			101			134			107							
YELLOW		129			102			135			108							
GREEN		130			103			136			109							
RED ARROW													A121	A124		A114	A101	
YELLOW ARROW													A122	A125		A115	A102	
FLASHING YELLOW ARROW													A123	A126		A116	A103	
GREEN ARROW																		
✋			113			104			119									
🚶			115			106			121									

NU = Not Used

★Denotes install load resistor. See load resistor installation detail this sheet.

★See pictorial of head wiring in detail this sheet.

FYA SIGNAL WIRING DETAIL

(wire signal heads as shown)

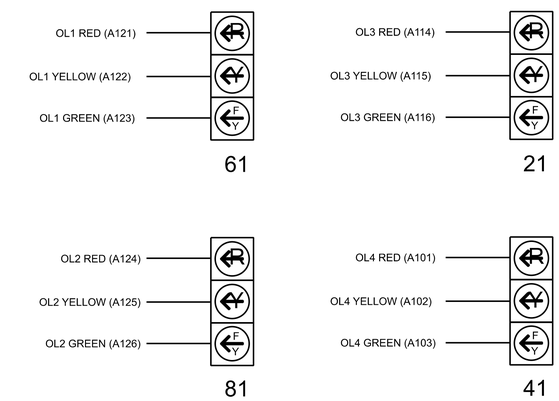

INPUT FILE POSITION LAYOUT

(front view)

		1	2	3	4	5	6	7	8	9	1O	11	12	13	14
FILE "I"	U	SLOT EMPTY	SLOT EMPTY	SLOT EMPTY	SLOT EMPTY	SLOT EMPTY	SLOT EMPTY	SLOT EMPTY	SLOT EMPTY	SLOT EMPTY	SLOT EMPTY	SLOT EMPTY	Ø 2 PED DC ISOLATOR	Ø 6 PED DC ISOLATOR	FS DC ISOLATOR
	L												Ø 4 PED DC ISOLATOR	NOT USED	ST DC ISOLATOR
FILE "J"	U	SLOT EMPTY	SLOT EMPTY	SLOT EMPTY	SLOT EMPTY	SLOT EMPTY	SLOT EMPTY	SLOT EMPTY	SLOT EMPTY	SLOT EMPTY	SLOT EMPTY	SLOT EMPTY	SLOT EMPTY	SLOT EMPTY	SLOT EMPTY
	L														

EX. : 1A, 2A, ETC. = LOOP NO.'S

FS = FLASH SENSE
ST = STOP TIME

INPUT FILE CONNECTION & PROGRAMMING CHART

LOOP NO.	LOOP TERMINAL	INPUT FILE POS.	PIN NO.	INPUT POINT	DETECTOR NO.	CALL PHASE	DELAY TIME	EXTEND TIME	EXTEND	ADDED INITIAL	CALL	DELAY DURING GREEN
2A	-	-	-	*	38	2			X		X	
2B	-	-	-	*	39	2			X		X	
4A	-	-	-	*	44	4	3.0		X		X	
4B	-	-	-	*	45	4	10.0		X		X	
6A	-	-	-	*	54	6			X		X	
6B	-	-	-	*	55	6			X		X	
8A	-	-	-	*	60	8	3.0		X		X	
8B	-	-	-	*	61	8	10.0		X		X	
PED PUSH BUTTONS												
P21,P22	TB8-4,6	I12U	67	33	2	PED 2						
P41,P42	TB8-5,6	I12L	69	35	4	PED 4						
P61,P62	TB8-7,9	I13U	68	34	6	PED 6						

NOTE:
INSTALL DC ISOLATORS IN INPUT FILE SLOTS I12 AND I13.

*For Input Point numbers, see SDLC Non-Intrusive Detection Chart detail on this sheet.

INPUT FILE POSITION LEGEND: J2L
FILE J
SLOT 2
LOWER

SPECIAL DETECTOR NOTE

Install a multizone microwave detection system for vehicle detection. Perform installation according to manufacturer's directions and NCDOT engineer -approved mounting locations to accomplish the detection schemes shown on the Signal Design Plans.

SDLC NON-INTRUSIVE DETECTION CHART

	Detector Rack #3		Detector Rack #4	
Input Point	Det # (Index)	Detector Zone	Det # (Index)	Detector Zone
1	33	NU	49	NU
2	34	NU	50	NU
3	35	NU	51	NU
4	36	NU	52	NU
5	37	NU	53	NU
6	38	2A	54	6A
7	39	2B	55	6B
8	40	NU	56	NU
9	41	NU	57	NU
10	42	NU	58	NU
11	43	NU	59	NU
12	44	4A	60	8A
13	45	4B	61	8B
14	46	NU	62	NU
15	47	NU	63	NU
16	48	NU	64	NU

NU = Not Used

THIS ELECTRICAL DETAIL IS FOR
THE SIGNAL DESIGN: 13-0176T
DESIGNED: FEBRUARY 2026
SEALED: 05/12/2026
REVISED:

HNTB
HNTB NORTH CAROLINA, P.C.
4000 Center at North Hills St
Suite 500
Raleigh, North Carolina 27609
NC License No: C-1554
(919) 546-8997

COUNTDOWN PEDESTRIAN SIGNAL OPERATION

Countdown Ped Signals are required to display timing only during Ped Clearance Interval. Consult Ped Signal Module user's manual for instructions on selecting this feature.

Signal Upgrade -
Electrical Detail - Sheet 1 of 2
(Construction Phase 2)

DOCUMENT NOT CONSIDERED FINAL UNLESS ALL SIGNATURES COMPLETED

ELECTRICAL AND PROGRAMMING DETAILS FOR:

US 221 Alt-US 74 Bus (Main St)
at
SR 2201 (Oak St)

Division 13 Rutherford County Spindale

PLAN DATE:	February 2026	REVIEWED BY:	N. K. Vlanich
PREPARED BY:	E.E. Tiller	REVIEWED BY:	N. R. Simmons

REVISIONS | INIT. | DATE

Prepared for the Offices of:
Traffic Engineering Mobility and Safety Division
Traffic Engineering & Signals Management Section
750 N. Greenfield Pkwy, Garner, NC 27529

SEAL
NORTH CAROLINA PROFESSIONAL SEAL 031464 ENGINEER NATASHA R. SIMMONS

DocuSigned by: Natasha R. Simmons 5/12/2026
SIGNATURE DATE

SIG. INVENTORY NO. 13-0176T