Docusign Envelope ID: BEAB5102-112E-88F8-8376-9CB70AEDFC95

09/08/99

TIP PROJECT: B-6047

CONTRACT: C204877

See Sheet 1A For Index of Sheets
See Sheet 1B For Conventional Plan Sheet Symbols

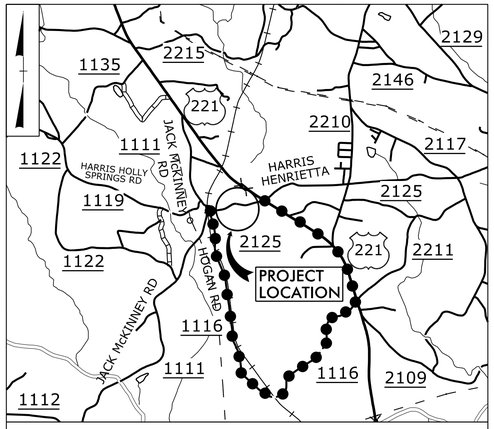

VICINITY MAP

● OFFSITE DETOUR ROUTE

FINAL PLAN SUBMITTAL

STATE OF NORTH CAROLINA
DIVISION OF HIGHWAYS

RUTHERFORD COUNTY

STATE	STATE PROJECT REFERENCE NO.	SHEET NO.	TOTAL SHEETS
N.C.	B-6047	1	

STATE PROJ. NO.	F. A. PROJ. NO.	DESCRIPTION
48390.1.1	BRZ-2125(003)	PE
48390.2.1	BRZ-2125(003)	RW & UTILITY
48390.3.1	BRZ-2125(003)	CONSTRUCTION

LOCATION: REPLACE BRIDGE 800145 OVER FLOYDS CREEK ON SR 2125 (HARRIS HENRIETTA ROAD)

TYPE OF WORK: GRADING, DRAINAGE, PAVING, AND STRUCTURE

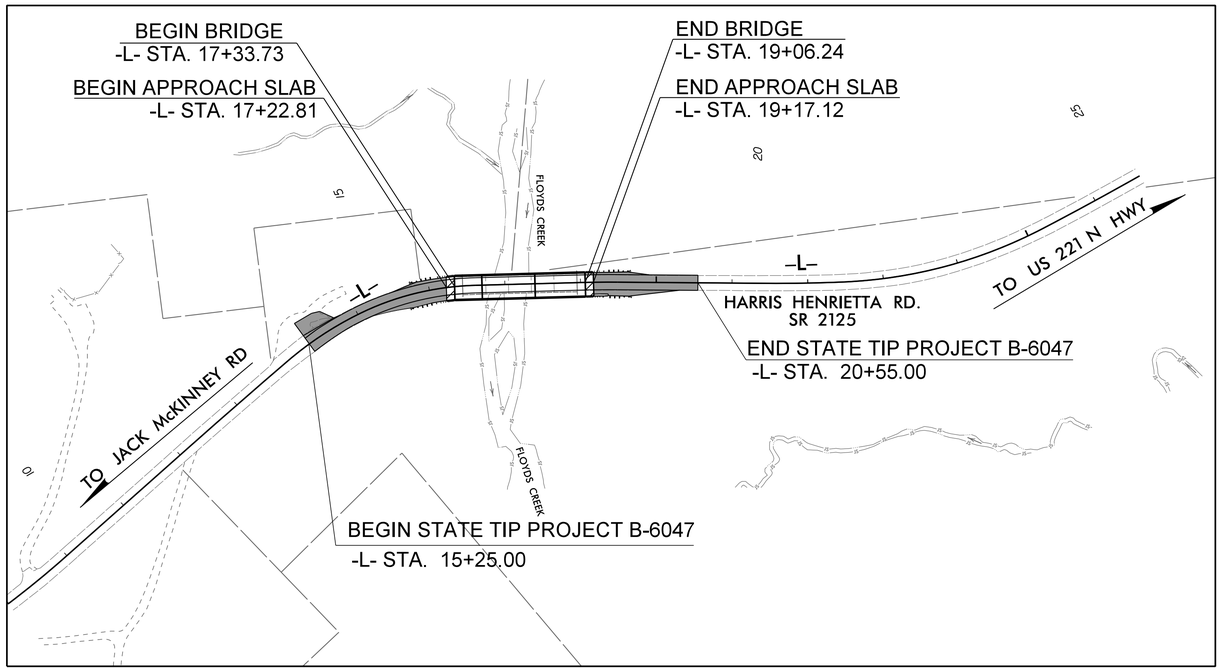

NAD 83/2011

DOCUMENT NOT CONSIDERED FINAL UNLESS ALL SIGNATURES COMPLETED

GRAPHIC SCALES

50 25 0 50 100
PLANS

50 25 0 50 100
PROFILE (HORIZONTAL)

10 5 0 10 20
PROFILE (VERTICAL)

DESIGN DATA

ADT 2025 = 779
ADT 2045 = 1158
T = 3 % *
V = 40 MPH
* (TTST = 1% + DUAL = 2%)
FUNC CLASS = RURAL LOCAL

* SUB-REGIONAL TIER GUIDELINES

PROJECT LENGTH

LENGTH ROADWAY TIP PROJECT B-6047	=	0.067 MI
LENGTH STRUCTURE TIP PROJECT B-6047	=	0.033 MI
TOTAL LENGTH TIP PROJECT B-6047	=	0.100 MI

PREPARED IN THE OFFICE OF:

WSP USA
434 FAYETTEVILLE STREET
SUITE 1500
RALEIGH, NC 27601
TEL: 1.919.836.4040
FAX: 1.919.836.4099
LICENSE NO. F-0165

FOR THE NORTH CAROLINA DEPARTMENT OF TRANSPORTATION

2024 STANDARD SPECIFICATIONS

RIGHT OF WAY DATE:
December 12, 2022

LETTING DATE:
August 18, 2026

RONYELL THIGPEN, PE
PROJECT ENGINEER

SAYMA AFREEN
PROJECT DESIGN ENGINEER

NCDOT CONTACT: Claudia Williams, PE
DIVISION 13 BRIDGE PROJECT ENGINEER

HYDRAULICS ENGINEER

DocuSigned by: Vidya Mohandas
SIGNATURE:
NORTH CAROLINA PROFESSIONAL SEAL 043232 ENGINEER VIDYA MOHANDAS
P.E. 7/8/2026

ROADWAY DESIGN ENGINEER

DocuSigned by:
SIGNATURE:
NORTH CAROLINA PROFESSIONAL SEAL 33290 ENGINEER RONYELL A. THIGPEN
P.E. 7/8/2026

STATE OF NORTH CAROLINA DEPARTMENT OF TRANSPORTATION

8:24:51 AM
B-6047_rdy_Tsh.dgn
7/8/2026

Docusign Envelope ID: BC5B4128-E234-4DDC-B168-1266E3900586

8/17/99

PROJECT REFERENCE NO.	SHEET NO.
B-6047	1A

ROADWAY DESIGN ENGINEER
3/3/2026
NORTH CAROLINA PROFESSIONAL SEAL 33290 ENGINEER ROWEEN A. THIGPEN
DocuSigned by:
DC0B45AADB6E447...

DOCUMENT NOT CONSIDERED FINAL UNLESS ALL SIGNATURES COMPLETED

PLANS PREPARED BY:
WSP USA
434 FAYETTEVILLE STREET
SUITE 1500
RALEIGH, NC 27601
TEL: 1.919.836.4040
FAX: 1.919.836.4099
LICENSE NO. F-0165

INDEX OF SHEETS

SHEET NUMBER	SHEET
1	TITLE SHEET
1A	INDEX OF SHEETS, GENERAL NOTES, AND STANDARD DRAWINGS
1B	CONVENTIONAL SYMBOLS
2A–1	PAVEMENT SCHEDULE AND TYPICAL SECTIONS
2C–1 THRU 2C–5	ROADWAY DETAILS
3B–1	ROADWAY SUMMARIES
3D–1	DRAINAGE SUMMARY
3G–1	GEOTECHNICAL SUMMARY
4	PLAN SHEET AND PROFILE SHEET
RW01 THRU RW04	SURVEY CONTROL, EXISTING CENTERLINES, RIGHT OF WAY, EASEMENT AND PROPERTY TIES
TMP–01 THRU TMP–04	TRAFFIC MANAGEMENT PLANS
PMP–1 THRU PMP–2	PAVEMENT MARKING PLANS
EC–1 THRU EC–5	EROSION CONTROL PLANS
SIGN–1 THRU SIGN–2	SIGNING PLANS
UO–1 THRU UO–2	UTILITIES BY OTHERS PLANS
X–1A	CROSS–SECTION SUMMARY
X–1 THRU X–8	CROSS–SECTIONS
S–1 THRU S–25	STRUCTURE PLANS
SN	STRUCTURE NOTES

GENERAL NOTES: 2024 SPECIFICATIONS

EFFECTIVE: 01–16–2024
REVISED:

GRADE LINE:
GRADING AND SURFACING:

THE GRADE LINES SHOWN DENOTE THE FINISHED ELEVATION OF THE PROPOSED SURFACING AT GRADE POINTS SHOWN ON THE TYPICAL SECTIONS. GRADE LINES MAY BE ADJUSTED AT THEIR BEGINNING AND ENDING AND AT STRUCTURES AS DIRECTED BY THE ENGINEER IN ORDER TO SECURE A PROPER TIE–IN.

CLEARING:

CLEARING ON THIS PROJECT SHALL BE PERFORMED TO THE LIMITS ESTABLISHED BY METHOD III.

SUPERELEVATION:

ALL CURVES ON THIS PROJECT SHALL BE SUPERELEVATED IN ACCORDANCE WITH STD. NO. 225.04 USING THE RATE OF SUPERELEVATION AND RUNOFF SHOWN ON THE PLANS. SUPERELEVATION IS TO BE REVOLVED ABOUT THE GRADE POINTS SHOWN ON THE TYPICAL SECTIONS.

SHOULDER CONSTRUCTION:

ASPHALT, EARTH, AND CONCRETE SHOULDER CONSTRUCTION ON THE HIGH SIDE OF SUPERELEVATED CURVES SHALL BE IN ACCORDANCE WITH STD. NO. 560.01

SIDE ROADS:

THE CONTRACTOR WILL BE REQUIRED TO DO ALL NECESSARY WORK TO PROVIDE SUITABLE CONNECTIONS WITH ALL ROADS, STREETS, AND DRIVES ENTERING THIS PROJECT. THIS WORK WILL BE PAID FOR AT THE CONTRACT UNIT PRICE FOR THE PARTICULAR ITEMS INVOLVED.

SUBSURFACE DRAINS:

SUBSURFACE DRAINS SHALL BE CONSTRUCTED IN ACCORDANCE WITH STD. NO. 815.02 AT LOCATIONS DIRECTED BY THE ENGINEER.

GUARDRAIL:

THE GUARDRAIL LOCATIONS SHOWN ON THE PLANS MAY BE ADJUSTED DURING CONSTRUCTION AS DIRECTED BY THE ENGINEER. THE CONTRACTOR SHOULD CONSULT WITH THE ENGINEER PRIOR TO ORDERING GUARDRAIL MATERIAL.

TEMPORARY SHORING:

SHORING REQUIRED FOR THE MAINTENANCE OF TRAFFIC WILL BE PAID FOR AS "EXTRA WORK" IN ACCORDANCE WITH SECTION 104–7.

END BENTS:

THE ENGINEER SHALL CHECK THE STRUCTURE END BENT PLANS, DETAILS, AND CROSS–SECTION PRIOR TO SETTING OF THE SLOPE STAKES FOR THE EMBANKMENT OR EXCAVATION APPROACHING A BRIDGE.

UTILITIES:

UTILITY OWNERS ON THIS PROJECT ARE DUKE ENERGY,

AT&T, AND LUMEN

ANY RELOCATION OF EXISTING UTILITIES WILL BE ACCOMPLISHED BY OTHERS.

RIGHT–OF–WAY MARKERS:

ALL RIGHT–OF–WAY MARKERS ON THIS PROJECT SHALL BE PLACED BY OTHERS.

EFF. 01–16–2024
REV.

2024 ROADWAY ENGLISH STANDARD DRAWINGS

The following Roadway Standards as appear in "Roadway Standard Drawings" Contracts Standards and Development Unit – N. C. Department of Transportation – Raleigh, N. C., Dated January 16, 2024 are applicable to this project and by reference hereby are considered a part of these plans:

STD.NO.	TITLE
DIVISION 2 – EARTHWORK	
200.03	Method of Clearing – Method III
225.02	Guide for Grading Subgrade – Secondary and Local
225.04	Method of Obtaining Superelevation – Two Lane Pavement
DIVISION 3 – PIPE CULVERTS	
300.01	Method of Pipe Installation (Use Details in Lieu of Standards for Sheets 1 and 2 of 2)
DIVISION 4 – MAJOR STRUCTURES	
423.01	Bridge Approach Fills – Type 1 Approach Fill for Bridge Abutment
DIVISION 5 – SUBGRADE, BASES AND SHOULDERS	
560.01	Method of Shoulder Construction – High Side of Superelevated Curve – Method I
DIVISION 8 – INCIDENTALS	
815.02	Subsurface Drain
840.00	Concrete Base Pad for Drainage Structures
840.18	Concrete Grated Drop Inlet Type 'B' – 12" thru 36" Pipe
840.25	Anchorage for Frames – Brick or Concrete or Precast
840.27	Brick Grated Drop Inlet Type 'B' – 12" thru 36" Pipe
840.29	Frames and Narrow Slot Flat Grates
840.45	Precast Drainage Structure
840.66	Drainage Structure Steps
846.01	Concrete Curb, Gutter and Curb & Gutter
862.01	Guardrail Placement (Use Details in Lieu of Standards for Sheets 4, 6, 12, and 14 of 15)
862.02	Guardrail Installation
862.03	Structure Anchor Units (Use Detail in Lieu of Standard for Sheet 8 of 9)
876.02	Guide for Rip Rap at Pipe Outlets

11:33:20 AM
B-6047_rdy_1A.dgn
3/3/2026

05/20/24

B-6047
IB

STATE OF NORTH CAROLINA, DIVISION OF HIGHWAYS
CONVENTIONAL PLAN SHEET SYMBOLS

Note: Not to Scale

BOUNDARIES AND PROPERTY:

- State Line
- County Line
- Township Line
- City Line
- Reservation Line
- Property Line
- Existing Iron Pin (EIP)
- Computed Property Corner
- Existing Concrete Monument (ECM)
- Parcel / Sequence Number
- Existing Fence Line
- Proposed Woven Wire Fence
- Proposed Chain Link Fence
- Proposed Barbed Wire Fence
- Existing Wetland Boundary
- Proposed Wetland Boundary
- Existing Endangered Animal Boundary
- Existing Endangered Plant Boundary
- Existing Historic Property Boundary
- Known Contamination Area: Soil
- Potential Contamination Area: Soil
- Known Contamination Area: Water
- Potential Contamination Area: Water
- Contaminated Site: Known or Potential

BUILDINGS AND OTHER CULTURE:

- Gas Pump Vent or U/G Tank Cap
- Sign
- Well
- Small Mine
- Foundation
- Area Outline
- Cemetery
- Building
- School
- Church
- Dam

HYDROLOGY:

- Stream or Body of Water
- Hydro, Pool or Reservoir
- Jurisdictional Stream
- Buffer Zone 1
- Buffer Zone 2
- Flow Arrow
- Disappearing Stream
- Spring
- Wetland
- Proposed Lateral, Tail, Head Ditch
- False Sump

RAILROADS:

- Standard Gauge
- RR Signal Milepost
- Switch
- RR Abandoned
- RR Dismantled

RIGHT OF WAY & PROJECT CONTROL:

- Primary Horiz Control Point
- Primary Horiz and Vert Control Point
- Secondary Horiz and Vert Control Point
- Vertical Benchmark
- Existing Right of Way Monument
- Proposed Right of Way Monument (Rebar and Cap)
- Proposed Right of Way Monument (Concrete)
- Existing Permanent Easement Monument
- Proposed Permanent Easement Monument (Rebar and Cap)
- Existing C/A Monument
- Proposed C/A Monument (Rebar and Cap)
- Proposed C/A Monument (Concrete)
- Existing Right of Way Line
- Proposed Right of Way Line
- Existing Control of Access Line
- Proposed Control of Access Line
- Proposed ROW and CA Line
- Existing Easement Line
- Proposed Temporary Construction Easement
- Proposed Temporary Drainage Easement
- Proposed Permanent Drainage Easement
- Proposed Permanent Drainage/Utility Easement
- Proposed Permanent Utility Easement
- Proposed Temporary Utility Easement
- Proposed Aerial Utility Easement

ROADS AND RELATED FEATURES:

- Existing Edge of Pavement
- Existing Curb
- Proposed Slope Stakes Cut
- Proposed Slope Stakes Fill
- Proposed Curb Ramp
- Existing Metal Guardrail
- Proposed Guardrail
- Existing Cable Guiderail
- Proposed Cable Guiderail
- Equality Symbol
- Pavement Removal

VEGETATION:

- Single Tree
- Single Shrub
- Hedge
- Woods Line
- Orchard
- Vineyard

EXISTING STRUCTURES:

MAJOR:
- Bridge, Tunnel or Box Culvert
- Bridge Wing Wall, Head Wall and End Wall

MINOR:
- Head and End Wall
- Pipe Culvert
- Footbridge
- Drainage Box: Catch Basin, DI or JB
- Paved Ditch Gutter
- Storm Sewer Manhole
- Storm Sewer

UTILITIES:

** SUE - Subsurface Utility Engineering*
LOS - Level of Service - A,B,C or D (Accuracy)

POWER:
- Existing Power Pole
- Proposed Power Pole
- Existing Joint Use Pole
- Proposed Joint Use Pole
- Power Manhole
- Power Line Tower
- Power Transformer
- U/G Power Cable Hand Hole
- H-Frame Pole
- U/G Power Line Test Hole (SUE - LOS A)*
- U/G Power Line (SUE - LOS B)*
- U/G Power Line (SUE - LOS C)*
- U/G Power Line (SUE - LOS D)*

TELEPHONE:
- Existing Telephone Pole
- Proposed Telephone Pole
- Telephone Manhole
- Telephone Pedestal
- Telephone Cell Tower
- U/G Telephone Cable Hand Hole
- U/G Telephone Test Hole (SUE - LOS A)*
- U/G Telephone Cable (SUE - LOS B)*
- U/G Telephone Cable (SUE - LOS C)*
- U/G Telephone Cable (SUE - LOS D)*
- U/G Telephone Conduit (SUE - LOS B)*
- U/G Telephone Conduit (SUE - LOS C)*
- U/G Telephone Conduit (SUE - LOS D)*
- U/G Fiber Optics Cable (SUE - LOS B)*
- U/G Fiber Optics Cable (SUE - LOS C)*
- U/G Fiber Optics Cable (SUE - LOS D)*

WATER:
- Water Manhole
- Water Meter
- Water Valve
- Water Hydrant
- U/G Water Line Test Hole (SUE - LOS A)*
- U/G Water Line (SUE - LOS B)*
- U/G Water Line (SUE - LOS C)*
- U/G Water Line (SUE - LOS D)*
- Above Ground Water Line

TV:
- TV Pedestal
- TV Tower
- U/G TV Cable Hand Hole
- U/G TV Test Hole (SUE - LOS A)*
- U/G TV Cable (SUE - LOS B)*
- U/G TV Cable (SUE - LOS C)*
- U/G TV Cable (SUE - LOS D)*
- U/G Fiber Optic Cable (SUE - LOS B)*
- U/G Fiber Optic Cable (SUE - LOS C)*
- U/G Fiber Optic Cable (SUE - LOS D)*

GAS:
- Gas Valve
- Gas Meter
- U/G Gas Line Test Hole (SUE - LOS A)*
- U/G Gas Line (SUE - LOS B)*
- U/G Gas Line (SUE - LOS C)*
- U/G Gas Line (SUE - LOS D)*
- Above Ground Gas Line

SANITARY SEWER:
- Sanitary Sewer Manhole
- Sanitary Sewer Cleanout
- U/G Sanitary Sewer Line
- Above Ground Sanitary Sewer
- SS Force Main Line Test Hole (SUE - LOS A)*
- SS Force Main Line (SUE - LOS B)*
- SS Force Main Line (SUE - LOS C)*
- SS Force Main Line (SUE - LOS D)*

MISCELLANEOUS:
- Utility Pole
- Utility Pole with Base
- Utility Located Object
- Utility Traffic Signal Box
- Utility Unknown U/G Line (SUE - LOS B)*
- U/G Tank; Water, Gas, Oil
- Underground Storage Tank, Approx. Loc.
- A/G Tank; Water, Gas, Oil
- Geoenvironmental Boring
- Abandoned According to Utility Records — AATUR
- End of Information — E.O.I.

Docusign Envelope ID: A0639C84-0A33-4384-8B3B-D9B57D542B7E

PROJECT REFERENCE NO.	SHEET NO.
B-6047	2A-1

ROADWAY DESIGN ENGINEER
3/4/2026
NORTH CAROLINA PROFESSIONAL SEAL 33290 ENGINEER RONALD A. THIEPEN

PAVEMENT DESIGN ENGINEER
3/3/2026
NORTH CAROLINA PROFESSIONAL SEAL 044590 ENGINEER ANDREW D. WARGO

DOCUMENT NOT CONSIDERED FINAL UNLESS ALL SIGNATURES COMPLETED

PLANS PREPARED BY:
WSP USA
434 FAYETTEVILLE STREET
SUITE 1500
RALEIGH, NC 27601
TEL: 1.919.836.4040
FAX: 1.919.836.4099
LICENSE NO. F-0165

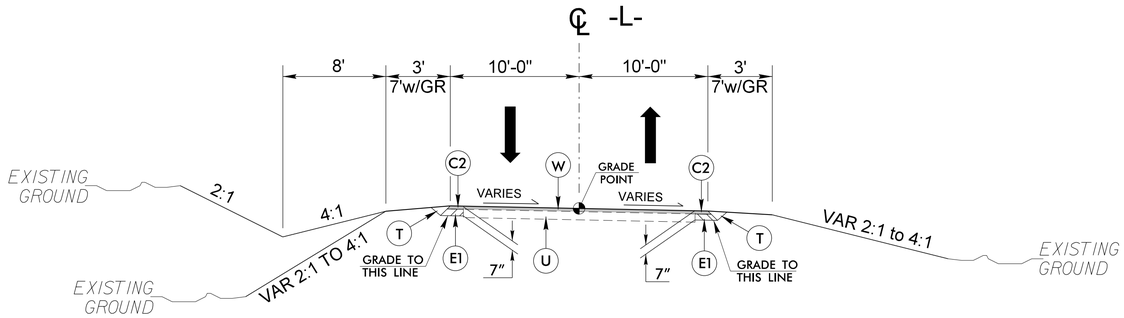

TYPICAL SECTION NO. 1

–L– STA. 15+25.00 TO STA. 17+33.73 (BEGIN BRIDGE)
–L– STA. 19+06.24 (END BRIDGE) TO STA. 20+55.00

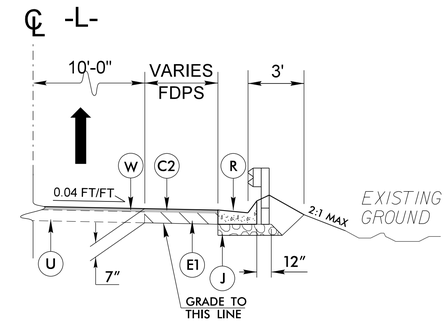

DETAIL A

SBG AT BRIDGE

(USE IN CONJUNCTION WITH TYPICAL SECTION NO. 1)
–L– STA. 19+17.33 TO 19+36.50 (RT)

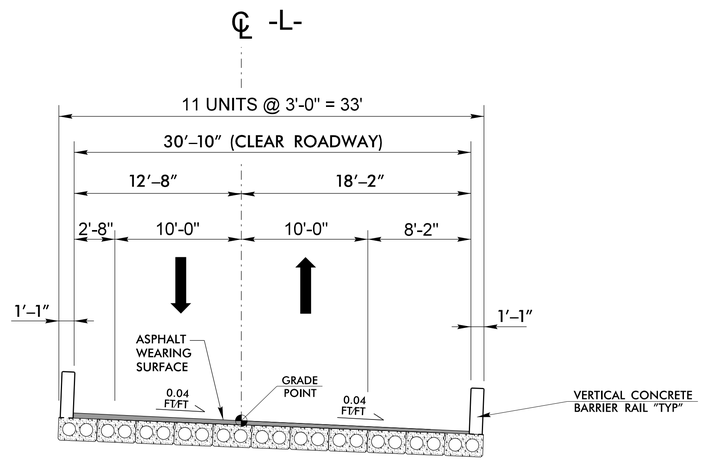

BRIDGE TYPICAL SECTION

–L– STA. 17+33.73 TO STA. 19+06.24
(SEE STRUCTURE PLANS FOR CONSTRUCTION DETAILS)

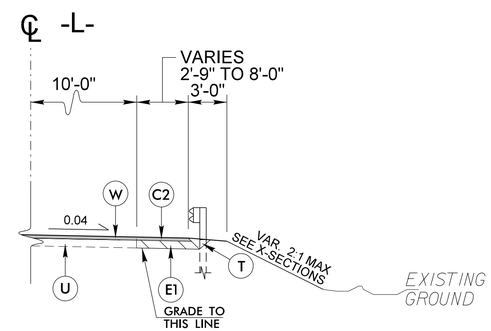

DETAIL B

GUARDRAIL

(USE IN CONJUNCTION WITH TYPICAL SECTION NO. 1)
–L– STA. 16+69.90 TO 17+32.40 (RT)
–L– STA. 16+84.68 TO 17+34.68 (LT)
–L– STA. 19+36.50 TO 19+68.85 (RT)
–L– STA. 19+06.17 TO 19+68.67 (LT)

FINAL PAVEMENT SCHEDULE

C1	PROP. APPROX. 1.5″ ASPHALT CONCRETE SURFACE COURSE, TYPE S9.5B, AT AN AVERAGE RATE OF 165 LBS. PER SQ. YD.
C2	PROP. APPROX. 3.0″ ASPHALT CONCRETE SURFACE COURSE, TYPE S9.5B, AT AN AVERAGE RATE OF 165 LBS. PER SQ. YD. IN EACH OF TWO LAYERS.
C3	PROP. VAR. DEPTH ASPHALT CONCRETE SURFACE COURSE, TYPE S9.5B, AT AN AVERAGE RATE OF 110 LBS. PER SQ. YD. PER 1″ DEPTH TO BE PLACED IN LAYERS NOT LESS THAN 1″ IN DEPTH OR GREATER THAN 1½″ IN DEPTH.
E1	PROP. APPROX. 4.0″ ASPHALT CONCRETE BASE COURSE, TYPE B25.0C, AT AN AVERAGE RATE OF 456 LBS. PER SQ. YD.
E2	PROP. VAR. DEPTH ASPHALT CONCRETE BASE COURSE, TYPE B25.0C, AT AN AVERAGE RATE OF 114 LBS. PER SQ. YD. PER 1″ DEPTH TO BE PLACED IN LAYERS NOT LESS THAN 3″ IN DEPTH OR GREATER THAN 5½″ IN DEPTH.
J	6″ AGGREGATE BASE COURSE
R	SHOULDER BERM GUTTER
T	EARTH MATERIAL.
U	EXISTING PAVEMENT.
W	WEDGING (DETAIL 1).

NOTES:
ALL PAVEMENT EDGE SLOPES ARE 1:1 UNLESS OTHERWISE NOTED.

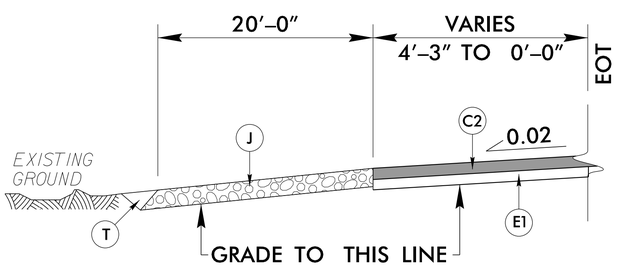

DETAIL C

PAVED SHOULDER AT BEGIN OF PROJECT

(USE IN CONJUNCTION WITH TYPICAL SECTION NO. 1)
–L– STA 15+25.00 TO 15+77.99 (LT)

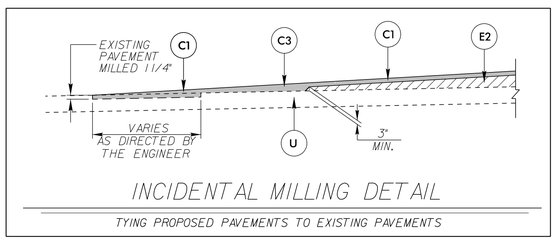

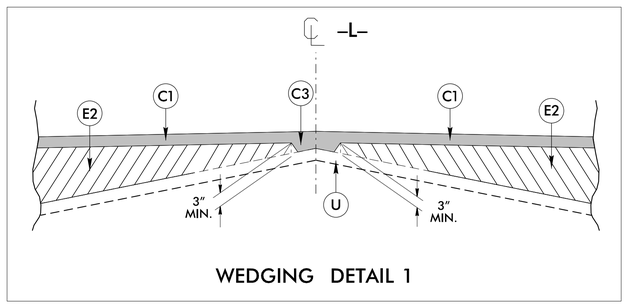

6/2/99
13:36 PM
B-6047_2A-1_dy_TYP.dgn
3/3/2026

Docusign Envelope ID: DEC65218-E830-4ABC-9041-24A3DEEF1F1A

PROJECT REFERENCE NO.	SHEET NO.
B-6047	2C-1

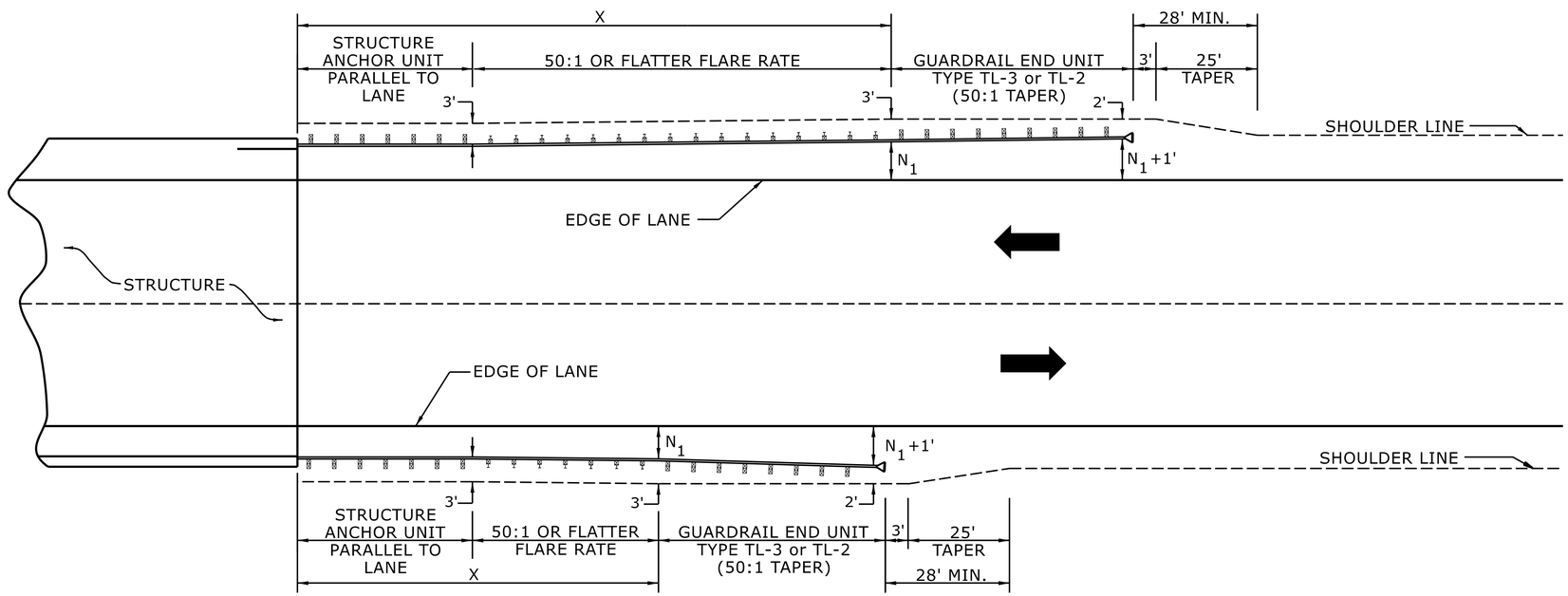

USE FLARE RATE AS THE CONTROL IF THE "N_1" DISTANCE IS NOT OBTAINED.
("N_1" IS BASED ON SHOULDER WIDTHS IN THE ROADWAY DESIGN MANUAL)

SEE STD. 862.03 FOR STRUCTURE ANCHOR UNITS

FOR POSTED SPEEDS ≥ 45MPH USE GREU TYPE TL-3
FOR POSTED SPEEDS < 45MPH USE GREU TYPE TL-2

GUARDRAIL LENGTH OF NEED (X) IS CALCULATED BASED ON THE AASHTO ROADSIDE DESIGN GUIDE.

LENGTHS AND OFFSETS FOR PROPOSED GUARDRAIL AT TWO LANE - TWO WAY LOCATIONS

STATE OF
NORTH CAROLINA
DEPT. OF TRANSPORTATION
DIVISION OF HIGHWAYS
RALEIGH, N.C.

ROADWAY DETAIL DRAWING FOR
GUARDRAIL PLACEMENT

SHEET 4 OF 15

862D01

NORTH CAROLINA PROFESSIONAL SEAL 033144 ENGINEER NICOLE M. HACKLER

Signed by:
Nicole M. Hackler
DEMO0000016164C5...
3/2/2026

DOCUMENT NOT CONSIDERED FINAL
UNLESS ALL SIGNATURES COMPLETED

CONTRACTS STANDARDS AND DEVELOPMENT UNIT
Office 919-707-6950 FAX 919-250-4119

SEE TITLE BLOCK

ORIGINAL BY: S.CALHOUN DATE: 7-25-2024
MODIFIED BY: DATE:
CHECKED BY: DATE:
FILE SPEC.:

Docusign Envelope ID: DEC65218-E830-4ABC-9041-24A3DEEF1F1A

PROJECT REFERENCE NO.	SHEET NO.
B-6047	2C-2

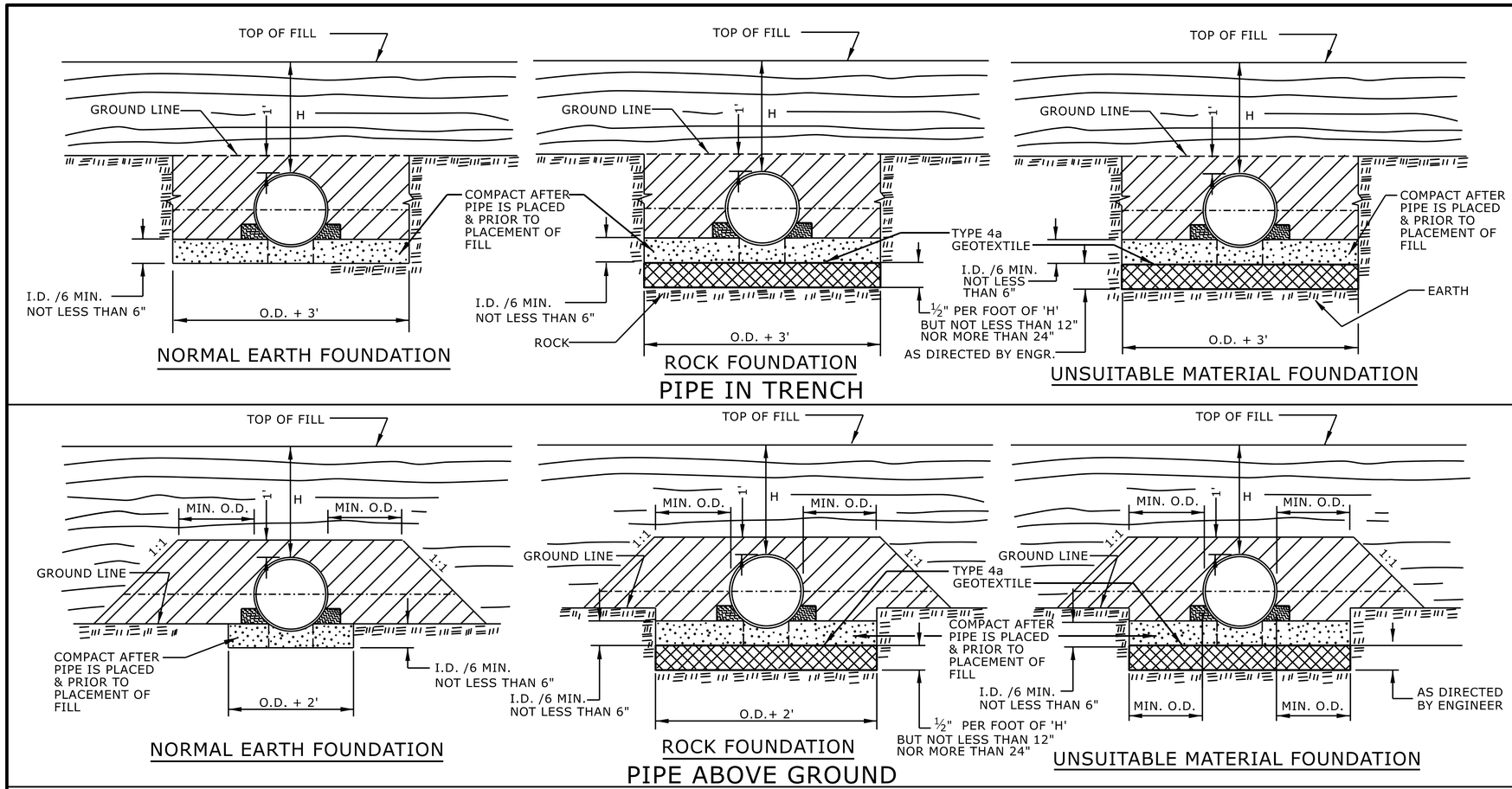

GENERAL NOTES:

I.D. = THE MAXIMUM HORIZONTAL INSIDE DIAMETER DIMENSION.

O.D. = THE MAXIMUM HORIZONTAL OUTSIDE DIAMETER DIMENSION.

H = THE FILL HEIGHT MEASURED VERTICALLY AT ANY POINT ALONG THE PIPE FROM THE TOP OF THE PIPE TO THE TOP OF THE EMBANKMENT AT THAT POINT.

APPROVED SUITABLE LOCAL MATERIAL.

TAKE CARE TO FULLY COMPACT HAUNCH ZONE OF PIPE BACKFILL.

LOOSELY PLACED SELECT MATERIAL CLASS III OR CLASS II, TYPE 1 FOR PIPE BEDDING. LEAVE SECTION DIRECTLY BENEATH PIPE UNCOMPACTED AS PIPE SEATING AND BACKFILL WILL ACCOMPLISH COMPACTION.

DO NOT OPERATE HEAVY EQUIPMENT OVER ANY PIPE CULVERT UNTIL THE PIPE CULVERT HAS BEEN PROPERLY BACKFILLED AND COVERED WITH AT LEAST 3 FEET OF APPROVED MATERIAL.

REFER TO NCDOT PIPE MATERIAL SELECTION GUIDE AND STANDARD SPECIFICATIONS FOR ALLOWABLE PIPE FILL HEIGHTS AND PIPE SPECIFICATIONS.

SPRINGLINE OF PIPE

SELECT BACKFILL MATERIAL CLASS III OR CLASS II, TYPE 1 ABOVE AND BELOW SPRINGLINE.

UNDISTURBED EARTH MATERIAL

SELECT MATERIAL CLASS V OR VI FOR FOUNDATION CONDITIONING. ENCAPSULATE WITH TYPE IV GEOTEXTILE AS DIRECTED BY THE ENGINEER.

STATE OF NORTH CAROLINA
DEPT. OF TRANSPORTATION
DIVISION OF HIGHWAYS
RALEIGH, N.C.

ROADWAY DETAIL DRAWING FOR

METHOD OF PIPE INSTALLATION

FLEXIBLE PIPE

NORTH CAROLINA PROFESSIONAL SEAL 033144 ENGINEER NICOLE M. HACKLER

Signed by: Nicole M. Hackler
DocuSigned by: 3/2/2026

SHEET 1 OF 2

300.01

DOCUMENT NOT CONSIDERED FINAL UNLESS ALL SIGNATURES COMPLETED

CONTRACTS STANDARDS AND DEVELOPMENT UNIT
Office 919-707-6950 FAX 919-250-4119

SEE TITLE BLOCK

ORIGINAL BY: S.CALHOUN DATE: 7-25-2024
MODIFIED BY: DATE:
CHECKED BY: DATE:
FILE SPEC.:

Docusign Envelope ID: DEC65218-E830-4ABC-9041-24A3DEEF1F1A

PROJECT REFERENCE NO.	SHEET NO.
B-6047	2C-3

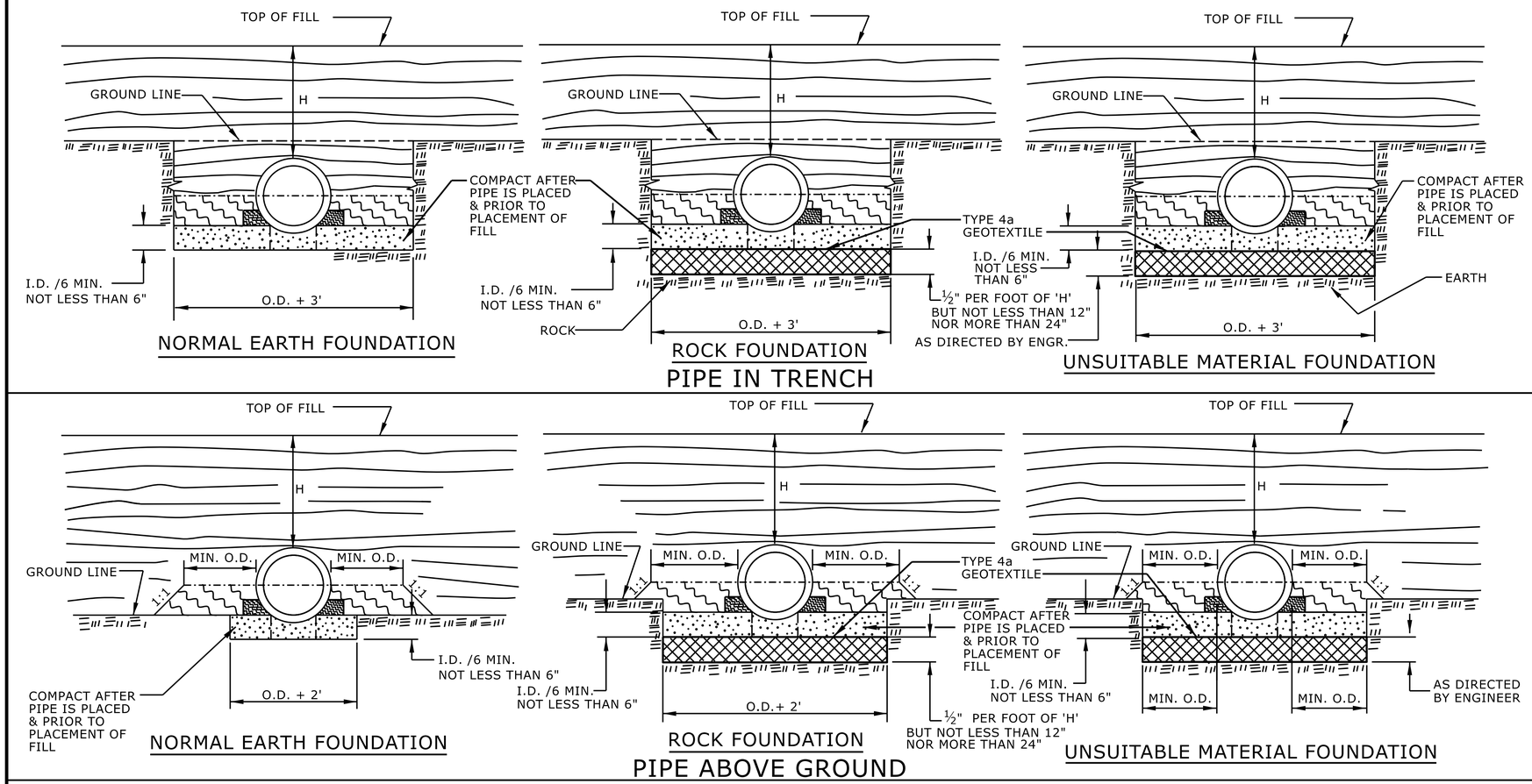

GENERAL NOTES:

I.D. = THE MAXIMUM HORIZONTAL INSIDE DIAMETER DIMENSION.

O.D. = THE MAXIMUM HORIZONTAL OUTSIDE DIAMETER DIMENSION.

H = THE FILL HEIGHT MEASURED VERTICALLY AT ANY POINT ALONG THE PIPE FROM THE TOP OF THE PIPE TO THE TOP OF THE EMBANKMENT AT THAT POINT.

APPROVED SUITABLE LOCAL MATERIAL.

TAKE CARE TO FULLY COMPACT HAUNCH ZONE OF PIPE BACKFILL.

LOOSELY PLACED SELECT MATERIAL CLASS III OR CLASS II, TYPE 1 FOR PIPE BEDDING. LEAVE SECTION DIRECTLY BENEATH PIPE UNCOMPACTED AS PIPE SEATING AND BACKFILL WILL ACCOMPLISH COMPACTION.

DO NOT OPERATE HEAVY EQUIPMENT OVER ANY PIPE CULVERT UNTIL THE PIPE CULVERT HAS BEEN PROPERLY BACKFILLED AND COVERED WITH AT LEAST 3 FEET OF APPROVED MATERIAL.

REFER TO NCDOT PIPE MATERIAL SELECTION GUIDE AND STANDARD SPECIFICATIONS FOR ALLOWABLE PIPE FILL HEIGHTS AND PIPE SPECIFICATIONS.

SPRINGLINE OF PIPE

SELECT BACKFILL MATERIAL CLASS III OR CLASS II, BELOW SPRINGLINE.

UNDISTURBED EARTH MATERIAL

SELECT MATERIAL CLASS V OR VI FOR FOUNDATION CONDITIONING. ENCAPSULATE WITH TYPE IV GEOTEXTILE AS DIRECTED BY THE ENGINEER.

STATE OF NORTH CAROLINA
DEPT. OF TRANSPORTATION
DIVISION OF HIGHWAYS
RALEIGH, N.C.

ROADWAY DETAIL DRAWING FOR

METHOD OF PIPE INSTALLATION

RIGID PIPE

NORTH CAROLINA PROFESSIONAL SEAL 033144 ENGINEER NICOLE M. HECKLER

Signed by: Nicole M. Heckler
1968420504164C5...
3/2/2026

SHEET 2 OF 2

300.01

DOCUMENT NOT CONSIDERED FINAL UNLESS ALL SIGNATURES COMPLETED

CONTRACTS STANDARDS AND DEVELOPMENT UNIT
Office 919-707-6950 FAX 919-250-4119

SEE TITLE BLOCK

ORIGINAL BY:	S.CALHOUN	DATE:	7-25-2024
MODIFIED BY:		DATE:	
CHECKED BY:		DATE:	
FILE SPEC.:			

Docusign Envelope ID: DEC65218-E830-4ABC-9041-24A3DEEF1F1A

PROJECT REFERENCE NO.	SHEET NO.
B-6047	2C-4

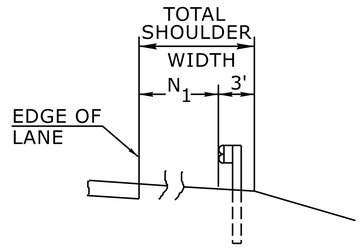

FILL SECTION

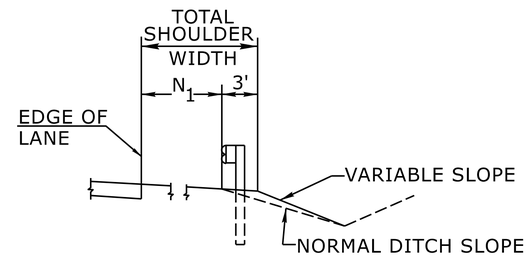

CUT SECTION

"N_1"= DISTANCE FROM EDGE OF LANE TO FACE OF GUARDRAIL WHERE GUARDRAIL IS PARALLEL TO LANE.

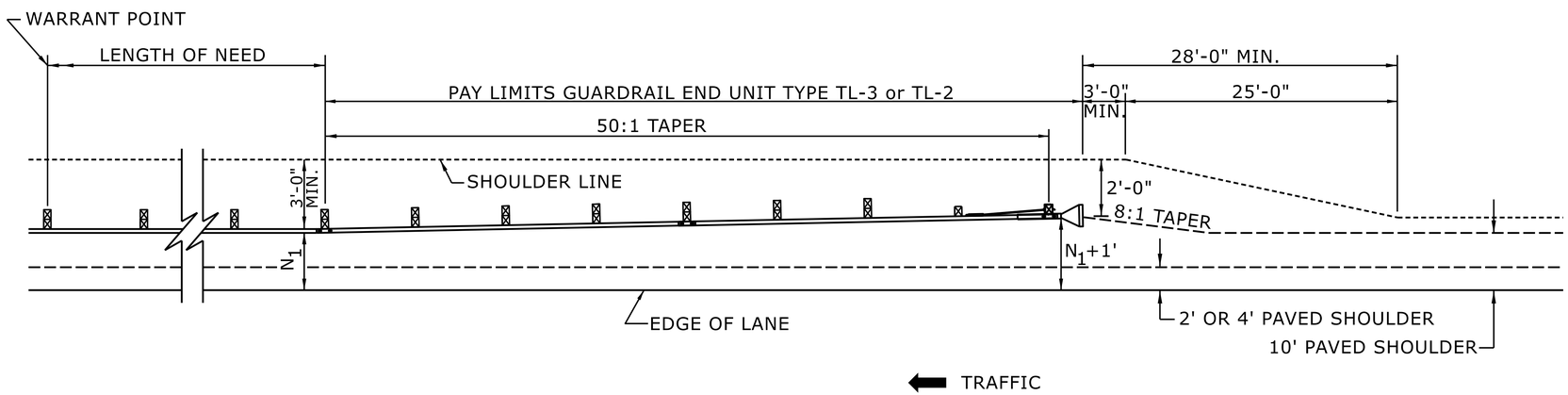

FOR POSTED SPEEDS ≥ 45mph USE GREU TYPE TL-3
FOR POSTED SPEEDS < 45mph USE GREU TYPE TL-2

DETAIL OF BEGINNING OF GUARDRAIL IN CUT OR FILL SECTION

STATE OF
NORTH CAROLINA
DEPT. OF TRANSPORTATION
DIVISION OF HIGHWAYS
RALEIGH, N.C.

ROADWAY DETAIL DRAWING FOR
GUARDRAIL PLACEMENT

SHEET 6 OF 15

862D01

NORTH CAROLINA PROFESSIONAL ENGINEER SEAL 033144 NICOLE M. HACKLER

Signed by: Nicole M. Hackler
5B8432D0416 4C5...
3/2/2026

DOCUMENT NOT CONSIDERED FINAL
UNLESS ALL SIGNATURES COMPLETED

CONTRACTS STANDARDS AND DEVELOPMENT UNIT
Office 919-707-6950 FAX 919-250-4119

SEE TITLE BLOCK

ORIGINAL BY:	S.CALHOUN	DATE:	7-25-2024
MODIFIED BY:		DATE:	
CHECKED BY:		DATE:	
FILE SPEC.:			

Docusign Envelope ID: BC5B4128-E234-4DDC-B168-1266E3900586

PROJECT REFERENCE NO.	SHEET NO.
B-6047	2C-5

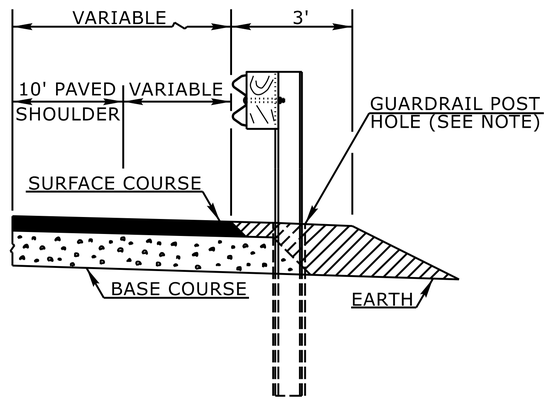

FLEXIBLE PAVED SHOULDER

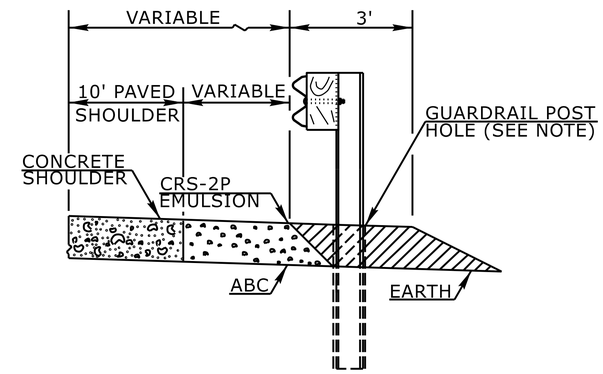

CONCRETE PAVED SHOULDER

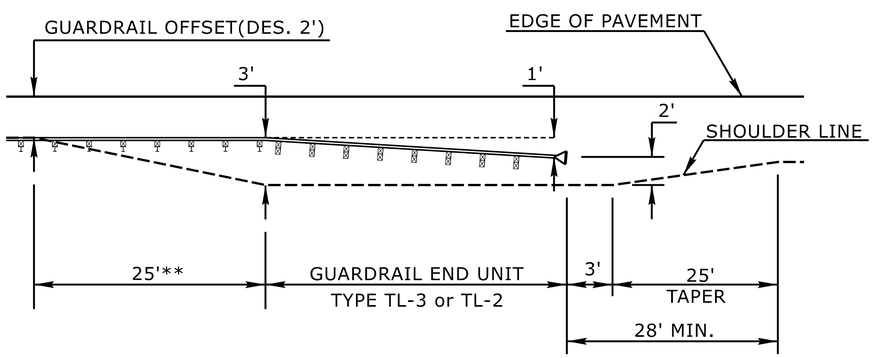

8' GUARDRAIL POST ON 2:1 SLOPE-END UNIT TRANSITION*
PLAN VIEW

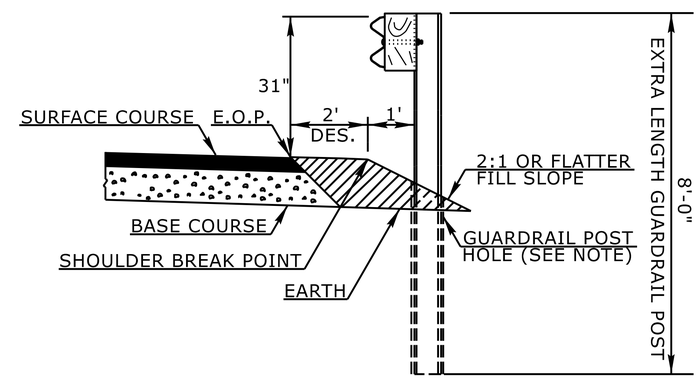

8' GUARDRAIL POST ON 2:1 SLOPE*

* THE 8' GUARDRAIL POST ON 2:1 SLOPE DETAIL IS INTENDED FOR USE ONLY IN SEVERELY CONSTRAINED AREAS WITH A POSTED SPEED ≤ 60 MPH. GUARDRAIL END UNITS MAY NOT BE PLACED ON THE 2:1 SLOPE AND MUST TRANSITION TO THE SHOULDER.
** 8' GUARDRAIL POST SHOULD BE USED IN THIS RANGE

NOTE:
WHEN WOODEN GUARDRAIL POSTS ARE USED, DRILL HOLES THROUGH EARTH MATERIAL AND BASE COURSE.THE POST MAY THEN BE DRIVEN TO THE PROPER DEPTH. DRILL THE HOLE OF SUFFICIENT SIZE TO ACCOMMODATE THE PARTICULAR POST BEING USED. BACKFILL AND TAMP HOLES USING THE EXCAVATED MATERIAL.

STATE OF
NORTH CAROLINA
DEPT. OF TRANSPORTATION
DIVISION OF HIGHWAYS
RALEIGH, N.C.

ROADWAY DETAIL DRAWING FOR
GUARDRAIL PLACEMENT

SHEET 11OF 15

862D01

NORTH CAROLINA PROFESSIONAL SEAL 033144 ENGINEER NICOLE M. HACKLER

Signed by: Nicole M. Hackler
DocuSign Envelope ID: BC5B4128-E234-4DDC-B168-1266E3900586
3/3/2026

DOCUMENT NOT CONSIDERED FINAL
UNLESS ALL SIGNATURES COMPLETED

CONTRACTS STANDARDS AND DEVELOPMENT UNIT
Office 919-707-6950 FAX 919-250-4119

SEE TITLE BLOCK

ORIGINAL BY:	L.SMITH	DATE:	10-14-2025
MODIFIED BY:		DATE:	
CHECKED BY:		DATE:	
FILE SPEC.:			

12/06/07

COMPUTED BY: ELM DATE: 08/29/2025
CHECKED BY: EDM DATE: 09/02/2025

STATE OF NORTH CAROLINA
DIVISION OF HIGHWAYS

PROJECT REFERENCE NO.	SHEET NO.
B-6047	3B-1

PLANS PREPARED BY:

WSP USA
434 FAYETTEVILLE STREET
SUITE 1500
RALEIGH, NC 27601
TEL: 1.919.836.4040
FAX: 1.919.836.4099
LICENSE NO. F-0165

SUMMARY OF EARTHWORK

STATION	STATION	UNCL. EXCAV.	EMBANK. +%	BORROW	WASTE
-L- 15+25.00	-L- 17+33.73	3	205	202	
-L- 19+06.24	-L- 20+55.00	2	1157	1155	
SUBTOTALS:		5	1362	1357	
SUBTOTALS:					
SUBTOTALS:					
PROJECT TOTALS:		5	1362	1357	
REPLACE TOPSOIL ON BORROW PIT			68	68	
GRAND TOTALS:		5	1430	1425	
SAY:		10		1450	

CONTINGENCY: EST. UNDERCUT = 450 CY
EST. GEOTEXTILE FOR SOIL STABILIZATION = 700 SY
EST. SELECT GRANULAR MATERIAL = 400 CY

APPROXIMATE QUANTITIES ONLY. UNCLASSIFIED EXCAVATION, FINE GRADING, CLEARING AND GRUBBING, REMOVAL OF EXISTING ASPHALT PAVEMENT AND REMOVAL OF EXISTING CONCRETE PAVEMENT WILL BE PAID FOR AT THE LUMP SUM PRICE OF "GRADING."

Earthwork quantities are calculated by the WSP.
These earthwork quantities are based in part on subsurface data provided by the Geotechnical Engineering Unit.

SUMMARY OF EXISTING ASPHALT PAVEMENT REMOVAL

SURVEY LINE	STATION	STATION	LOCATION LT/RT/CL	YD^2
-L-	15+25.00	17+44.00		68.15
-L-	18+95.00	19+20.00		48.94
			TOTAL:	117.09
			SAY:	120

SUMMARY OF EXISTING CONCRETE PAVEMENT REMOVAL

SURVEY LINE	STATION	STATION	LOCATION LT/RT/CL	YD^2
-L-	15+41.00	15+66.00		15.80
			TOTAL:	15.80
			SAY:	20

SHOULDER BERM GUTTER SUMMARY

SURVEY LINE	STATION	STATION	LENGTH
-L-	19+17.33	19+36.50	19.17
		TOTAL:	19.17
		SAY:	20

"N" = DISTANCE FROM EDGE OF LANE TO FACE OF GUARDRAIL.
TOTAL SHOULDER WIDTH = DISTANCE FROM EDGE OF TRAVEL LANE TO SHOULDER BREAK POINT.
FLARE LENGTH = DISTANCE FROM LAST SECTION OF PARALLEL GUARDRAIL TO END OF GUARDRAIL.
W = TOTAL WIDTH OF FLARE FROM BEGINNING OF TAPER TO END OF GUARDRAIL.
G = GATING IMPACT ATTENUATOR TYPE 350
NG = NON-GATING IMPACT ATTENUATOR TYPE 350

GUARDRAIL SUMMARY

SURVEY LINE	BEG. STA.	END STA.	LOCATION	LENGTH			WARRANT POINT		"N" DIST. FROM E.O.L.	TOTAL SHOUL. WIDTH	FLARE LENGTH		W		ANCHORS								IMPACT ATTENUATOR TYPE 350			SINGLE FACED GUARDRAIL	REMOVE EXISTING GUARDRAIL	REMOVE AND STOCKPILE EXISTING GUARDRAIL	REMARKS
				STRAIGHT	SHOP CURVED	DOUBLE FACED	APPROACH END	TRAILING END			APPROACH END	TRAILING END	APPROACH END	TRAILING END	XI MOD	TYPE III	GREU TL-2	M-350	XIII	CAT-1	VI MOD	BIC	AT-1	EA	G	NG				
-L-	16+69.90	17+32.40	RT	62.50'			17+32.40 (BRIDGE)		7'-2"	10'-2"	25'		0'-6"			1	1												
-L-	16+78.43	17+34.68	LT	62.50'				17+34.68 (BRIDGE)	3'-6"	5'-6"		25'		0'-6"		1	1												
-L-	19+06.35	19+68.85	RT	62.50'				19+06.35 (BRIDGE)	8'-0"	11'-0"	25'		0'-6"			1	1												
-L-	19+06.17	19+68.67	LT	62.50'			19+06.17 (BRIDGE)		2'-9"	5'-9"		25'		0'-6"		1	1												
			SUBTOTAL	250'																									
			LESS DEDUCTIONS																										
			GREU TL-2 (4 x 25)=	100'																									
			TYPE III (4 x 18.75)=	75'																									
			SUBTOTAL	75'			ADDITIONAL GUARDRAIL POSTS = 5									4	4												
			TOTALS	75'												4	4												
			SAY	75'																									

7:55:24 AM
B-6047_rdy_3B-1.dgn
4/8/2026

7LMV2J3

COMPUTED BY:	Victoria Fyfe, EI	DATE:	06/15/2022
CHECKED BY:	Vidya Mohandas,PE	DATE:	

PROJECT NO.	SHEET NO.
B-6047	3D-1

NORTH CAROLINA DEPARTMENT OF TRANSPORTATION
DIVISION OF HIGHWAYS

Note: Invert Elevations indicated are for Bid Purposes only and shall not be used for project construction stakeout.
See "Standard Specifications For Roads and Structures, Section 300-5".

LIST OF PIPES, ENDWALLS, ETC. (FOR PIPES 48 INCHES & UNDER)

LINE & STATION	OFFSET	STRUCTURE NUMBER FROM	STRUCTURE NUMBER TO	TOP ELEVATION FT.	INVERT ELEVATION FT.	INVERT ELEVATION FT.	MINIMUM REQUIRED SLOPE %	C. S. PIPE 12 (.064)	C. S. PIPE 15 (.064)	C. S. PIPE 18 (.064)	C. S. PIPE 24 (.064)		C. S. PIPE 30 (.079)	C. S. PIPE 36 (.079)	C. S. PIPE 42 (.109)	C. S. PIPE 48 (.109)	C. S. PIPE 54		R. C. PIPE CLASS III 12	R. C. PIPE CLASS III 15	R. C. PIPE CLASS III 18	R. C. PIPE CLASS III 24	R. C. PIPE CLASS III 30	R. C. PIPE CLASS III 36	R. C. PIPE CLASS III 42	R. C. PIPE CLASS III 48	R. C. PIPE CLASS III 54	
L 19+24	17 RT	0401		752.0																								
		0401	0402		749.2	749.1														12								
L 19+33	17 RT	0402		752.2																								
		0402	0403		749.1	738.8			40																			
SHEET TOTALS									40											12								
PROJECT TOTALS									40											12								

LINE & STATION	ENDWALLS STD. 838.01 OR STD. 838.11 (UNLESS NOTED OTHERWISE) CY	REINFORCED ENDWALLS CY	DRAINAGE STRUCTURE MASONRY CY	QUANTITIES FOR DRAINAGE STRUCTURES (NOTE: TOTAL LIN. FT. FOR PAY QUANTITY SHALL BE A + (1.3 X B)) 0' THRU 5' EACH	A 5' THRU 10' LIN. FT.	B 10' AND ABOVE LIN. FT.	C.B. STD. 840.01 OR STD. 840.02	FRAME, GRATES, AND HOOD STD. 840.03 GRATE TYPE E	F	G		CONCRETE TRANSITIONAL SECTION D.I. STD. 852.04 OR STD. 852.06	CONCRETE TRANSITIONAL SECTION C.B. STD. 852.05	OPEN THROAT C.B. STD. 840.04 OR STD. 840.05	CONCRETE BRIDGE APPROACH D.I. STD. 840.13	D.I. STD. 840.14 OR STD. 840.15	D.I. FRAME AND GRATES STD. 840.16	G.D.I. TYPE "A" STD. 840.17 OR STD. 840.26	G.D.I. TYPE "B" STD. 840.18 OR STD. 840.27	G.D.I. TYPE "D" STD. 840.19 OR STD. 840.28	G.D.I. (W.S. FLAT) FRAME WITH GRATE STD. 840.20	G.D.I. (W.S. FLAT) FRAME W/ 2 GRATES STD. 840.20	G.D.I. (W.S. SAG) FRAME W/ GRATE STD. 840.22	G.D.I. (W.S. SAG) FRAME W/ 2 GRATES STD. 840.22	G.D.I. (N.S. SAG) FRAME W/ GRATE STD. 840.24	G.D.I. (N.S. SAG) FRAME W/ 2 GRATES STD. 840.24	G.D.I. (N.S. FLAT) FRAME W/ GRATE STD. 840.29	G.D.I. (N.S. FLAT) FRAME W/ 2 GRATES STD. 840.29
L 19+24				1															1									1
L 19+33				1															1									1
SHEET TOTALS				2															2									2
PROJECT TOTALS				2															2									2

LINE & STATION	DRIVEWAY D.I. STD. 840.30	FRAME W/ GRATE FOR DRIVEWAY STD. 840.30	J.B. STD. 840.31 OR STD. 840.32	ANGLED VANE GRATES AND FRAMES STD. 840.33	T.B.J.B. STD. 840.34	T.B.D.I. STD. 840.35	T.B.D.I. FOR STEEL GRATES STD. 840.36	STEEL FRAME WITH TWO GRATES STD. 840.37	TEMP STEEL PLATE COVER MASONRY DRAINAGE	M.H. FRAME AND COVER STD. 840.54	CONVERT EXISTING C.B. TO J.B.	CONVERT EXISTING C.B. TO D.I.	CONVERT EXISTING D.I. TO J.B.	CONVERT EXISTING J.B. TO D.I.	ADJUST C.B.	ADJUST D.I.	15" C.S. ELBOW	18" C.S. ELBOW	24" C.S. ELBOW	30" C.S. ELBOW	36" C.S. ELBOW	PREFORMED SCOUR HOLE (PER EACH)	ENERGY DISSIPATION BASIN	FLOWABLE FILL CY	CONCRETE COLLARS CL. "B" STD. 840.72 CY	CONCRETE AND BRICK PIPE PLUG STD. 840.71 CY	PIPE REMOVAL LIN. FT.	REMARKS
L 19+33 (0402–0403)																	2											
SHEET TOTALS																	2											
PROJECT TOTALS																	2											

ABBREVIATIONS

C.A.A.	CORRUGATED ALUMINIUM ALLOY
C.B.	CATCH BASIN
C.S.	CORRUGATED STEEL
D.I.	DROP INLET
G.D.I.	GRATED DROP INLET
H.D.P.E.	HIGH DENSITY POLYETHYLENE
J.B.	JUNCTION BOX
M.H.	MANHOLE
N.S.	NARROW SLOT
P.V.C.	POLYVINYL CHLORIDE
R.C.	REINFORCED CONCRETE
T.B.D.I.	TRAFFIC BEARING DROP INLET
T.B.J.B.	TRAFFIC BEARING JUNCTION BOX
W.S.	WIDE SLOT

COMPUTED BY: DMM_____ DATE: 10/17/2022__
CHECKED BY: SCC_____ DATE: 10/17/2022__

(12-17-19)

STATE OF NORTH CAROLINA
DIVISION OF HIGHWAYS

PROJECT NO.	SHEET NO.
B-6047	3G-1

SUMMARY OF SUBSURFACE DRAINAGE

LINE	Station	Station	Location LT/RT/CL	Drain Type* UD/BD/SD	LF
CONTINGENCY				SD	200
				TOTAL LF:	200

***UD = Underdrain**
***BD = Blind Drain**
***SD = Subsurface Drain**

SUMMARY OF AGGREGATE SUBGRADE/STABILIZATION

LINE	Station	Station	Aggregate Type* ASU(1/2)/ AST	Aggregate Thickness INCHES [8" for ASU(2)]	Shallow Undercut CY	Class IV Subgrade Stabilization TONS	Geotextile for Soil Stabilization SY	Stabilizer Aggregate TONS	Class IV Aggregate Stabilization TONS
CONTINGENCY			1		100	200	500		
			TOTAL CY/TONS/SY:		100	200**	500**	0	0

***ASU(1/2) = Aggregate Subgrade (Type 1 or 2)**
***AST = Aggregate Stabilization**
****Total tons of "Class IV Subgrade Stabilization" and total square yards of "Geotextile for Soil Stabilization" are only the estimated quantities for ASU(1/2)/AST and may only represent a portion of the subgrade stabilization and geotextile quantities shown in the Item Sheets of the Proposal.**

Docusign Envelope ID: 02873C05-DF08-89DE-82B5-41829899270A

8/17/99

REVISIONS

PROJECT REFERENCE NO.	SHEET NO.
B-6047	4
R/W SHEET NO.	

ROADWAY DESIGN ENGINEER
4/8/2026
NORTH CAROLINA PROFESSIONAL SEAL 33290 ENGINEER RONYELL A. THIGPEN
DocuSigned by: Ronyell A. Thigpen
PC3F41A0D8EA47...

HYDRAULICS ENGINEER
4/8/2026
NORTH CAROLINA PROFESSIONAL SEAL 043232 ENGINEER TONYA MCHANDAS
DocuSigned by: Tonya McHandas
0E7C2B5FEC8D40A...

PLANS PREPARED BY:

WSP USA
434 FAYETTEVILLE STREET
SUITE 1500
RALEIGH, NC 27601
TEL: 1.919.836.4040
FAX: 1.919.836.4099
LICENSE NO. F-0165

-L- CURVE DATA

PI Sta 14+04.46	PI Sta 15+43.96	PI Sta 16+81.03	PI Sta 19+23.25	PI Sta 21+96.63	PI Sta 23+86.95	PI Sta 25+94.26
Δ = 0° 57' 59.8" (RT)	Δ = 13° 58' 24.0" (RT)	Δ = 25° 07' 51.7" (RT)	Δ = 1° 57' 32.8" (RT)	Δ = 2° 57' 18.7" (LT)	Δ = 25° 02' 06.5" (LT)	Δ = 1° 56' 24.5" (LT)
D = 0° 34' 22.6"	D = 12° 43' 56.6"	D = 15° 29' 07.2"	D = 3° 49' 11.0"	D = 2° 51' 53.2"	D = 9° 10' 02.4"	D = 1° 19' 45.7"
L = 168.71'	L = 109.75'	L = 162.29'	L = 51.29'	L = 103.16'	L = 273.09'	L = 145.95'
T = 84.36'	T = 55.15'	T = 82.47'	T = 25.65'	T = 51.59'	T = 138.76'	T = 72.98'
R = 10,000.00'	R = 450.00'	R = 370.00'	R = 1,500.00'	R = 2,000.00'	R = 625.00'	R = 4,310.00'
DS = EXIST	DS = 35 MPH	DS = 30 MPH	DS = EXIST	DS = EXIST	DS = EXIST	DS = EXIST
	SE = 0.04	SE = 0.04				
	RO = 70'	RO = 70'				

DETAIL A
SLOPE STABILIZATION
(Not to Scale)

Type of Liner= CL 'B' Rip-Rap
24 SY OF GEOTEXTILE, 20 TON CLASS B RIP-RAP

FROM -L- STA. 17+40 TO 17+82 LT

DETAIL C
TOE PROTECTION
(Not to Scale)

Type of Liner= Class B Rip-Rap

FROM STA. 19+50 TO STA. 19+91 LT

DETAIL B
BANK STABILIZATION
(Not to Scale)

Type of Liner= CL 'B' Rip-Rap - Keyed-In

FROM STA.	TO STA.	RIP-RAP (TONS)	GEOTEXTILE (SY)
17+60	17+92	86	87
18+27	18+43	56	57

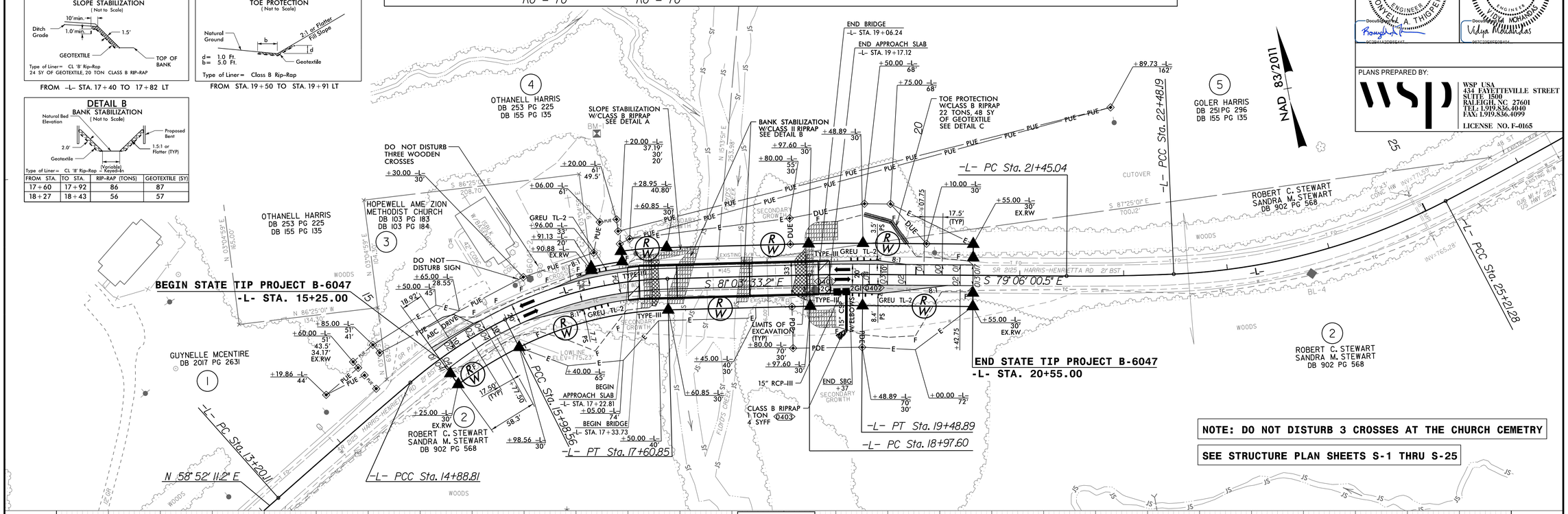

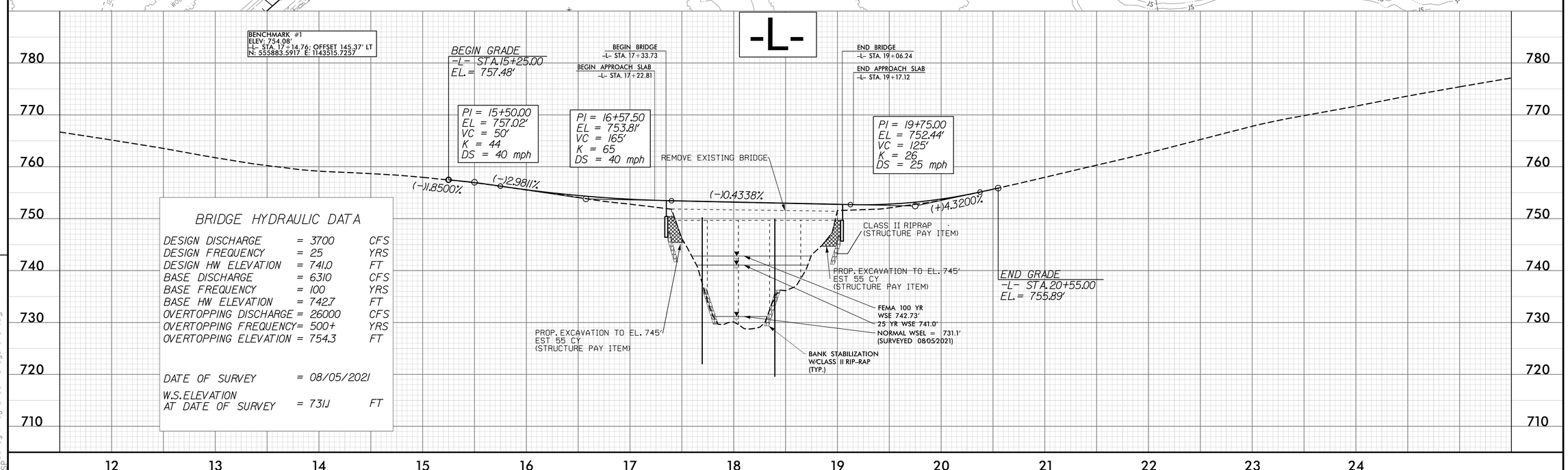

BRIDGE HYDRAULIC DATA

DESIGN DISCHARGE	= 3700	CFS
DESIGN FREQUENCY	= 25	YRS
DESIGN HW ELEVATION	= 741.0	FT
BASE DISCHARGE	= 6310	CFS
BASE FREQUENCY	= 100	YRS
BASE HW ELEVATION	= 742.7	FT
OVERTOPPING DISCHARGE	= 26000	CFS
OVERTOPPING FREQUENCY	= 500+	YRS
OVERTOPPING ELEVATION	= 754.3	FT
DATE OF SURVEY	= 08/05/2021	
W.S. ELEVATION AT DATE OF SURVEY	= 731.1	FT

08-APR-2026 10:10
...\Roadway\Proj\B-6047_rdy_Psh04.dgn